Crystal Units

■ Crystal Units List

Shape	Model	For Automotive	Number of terminals	Page	Frequency Range (MHz) 3 4 5 10 20 30 40 50 70 100 200
Surface mount type	■ Tuning Fork Crystal Unit (kHz range)				
	NX1610SA		2	3	
	NX2012SA		2	5	
	NX3215SA		2	7	
	NX1610SE (Low ESR)		2	4	
	NX2012SE (Low ESR)		2	6	
	NX3215SE (Low ESR)		2	8	● 32.768kHz
	NX2012SA	○	2	5	
	NX3215SA	○	2	6	
	NX3215SD (Enhanced products of solder cracking resistance)	○	2	9	
	NX3215SF (For Specially controlled medical devices Class III)		2	10	
	■ Crystal Unit with built-in temperature sensor (MHz range)				
	NX1210AC		4	11	
	NX1612SD		4	12	
	NX2016SF		4	13	
	NX2016SF	○	4	15	
	NX2520SG		4	14	
	■ Crystal Units (MHz range) / Size : 1.0×0.8mm				
	NX1008AA		4	16	
	■ Crystal Units (MHz range) / Size : 1.2×1.0mm				
	NX1210AB		4	17	
	■ Crystal Units (MHz range) / Size : 1.6×1.2mm				
	NX1612SA		4	18	
	NX1612SA	○	4	19	
	■ Crystal Units (MHz range) / Size : 2.0×1.6mm				
	NX2016GC	○	2	21	
	NX2016SA		4	20	
	NX2016SA	○	4	22	
Shape	Model	For Automotive	Number of terminals	Page	3 4 5 10 20 30 40 50 70 100 200 Frequency Range (MHz)

* Fundamental 3rd overtone 5th overtone

For details, please see our website (https://www.ndk.com/).

■ Crystal Units List

Shape	Model	For Automotive	Number of terminals	Page
Surface mount type	■ Crystal Units (MHz range) / Size : 2.5×2.0mm			
	NX2520SA		4	23
	■ Crystal Units (MHz range) / Size : 3.2×2.5mm			
	NX3225GA		4	25
	NX3225GA	○	4	26
	NX3225GB	○	2	27
	NX3225GD	○	2	28
	NX3225SA		4	24
	NX3225SA	○	4	27
	■ Crystal Units (MHz range) / Size : 5.0×3.2mm			
	NX5032GA		2	31
	NX5032GA	○	2	32
	NX5032SD	○	4	33
	■ Crystal Units (MHz range) / Size : 8.0×4.5mm			
	NX8045GB		2	34
	NX8045GB	○	2	36
	NX8045GE	○	2	35
Lead mounting type	AT–41		2	37
	AT–41CD2		2	37
	NR–2C		2	38
	NR–2B		2	38
	RC-8		5	39
	NC-18C		2	39

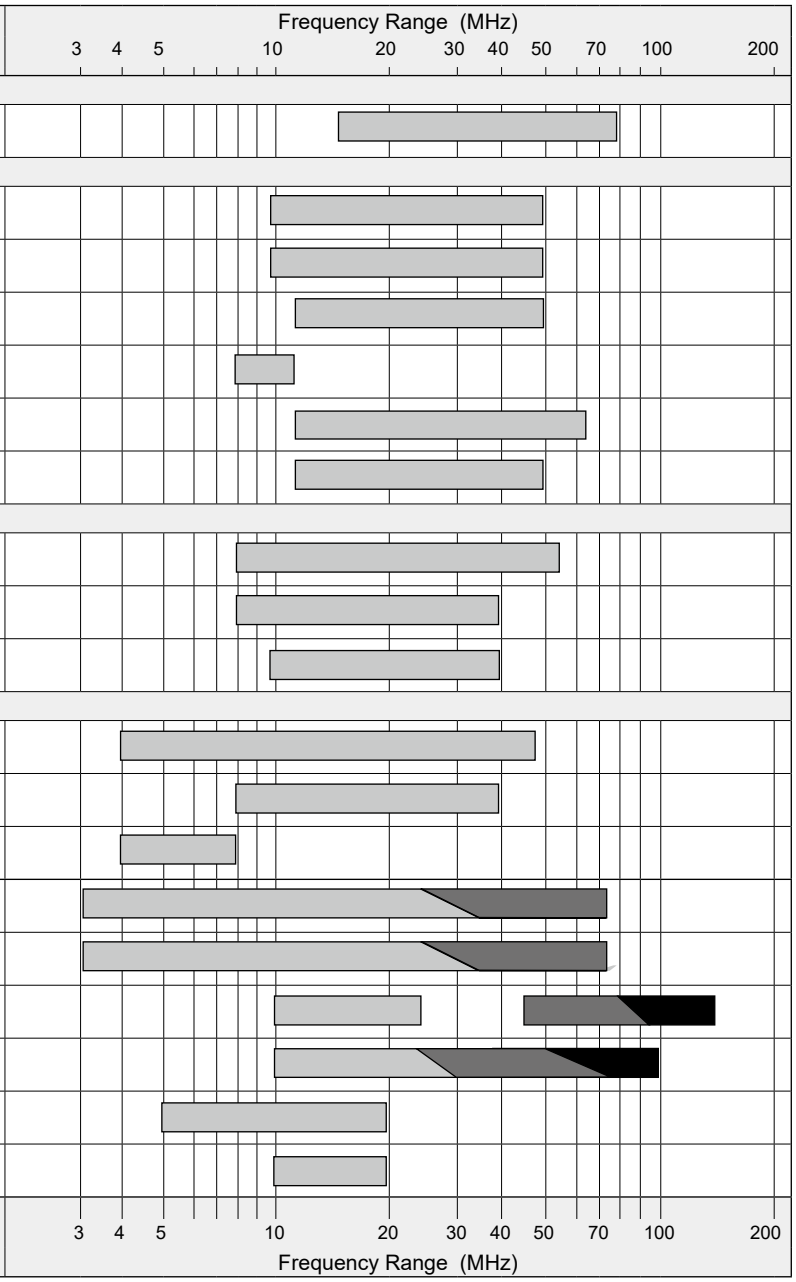

* Fundamental 3rd overtone 5th overtone

For details, please see our website (https://www.ndk.com/).

NX1610SA

For OA / AV / Mobile Communications

■ Features

Ultra compact, thin, and light weight tuning fork crystal unit.

- ●Ultra compact and thin. (1.6×1.0×0.45mm)
- ●Excellent electric performance optimum for mobile communications, OA (office automation) and AV (audiovisual) applications are exhibited.
- ●A surface-mount crystal oscillator. (Reflow soldering is possible.)
- ●RoHS compliant. These can meet the requirements of re-flow profiling using leadfree solder.

Pb Free

RoHS Compliant
Directive 2011/65/EU
Directive (EU) 2015/863

■ Specifications

Item \ Model	NX1610SA			
Standard	Standard			Optional
Nominal Frequency (kHz)	32.768			32.768
Operating Temperature Range (°C)	−40 to +85			−40 to +85 *1
Storage Temperature Range (°C)	−40 to +85			−40 to +85 *1
Level of Drive (μW)	0.1 (Max. 0.5)			0.1 (Max. 0.5) *1
Frequency Tolerance (25 ±3 °C)	$\pm 20 \times 10^{-6}$			$\pm 20 \times 10^{-6}$
Turning Point (°C)	+25 ± 5			+25 ± 5
Temperature Coefficient (/°C²)	Max. -0.04×10^{-6}			Max. -0.04×10^{-6}
Load Capacitance (pF)	6.0	9.0	12.5	6.0 to 12.5
Equivalent Series Resistance (kΩ)	Max. 90			Max. 90 *1
Shunt Capacitance (pF)	Typ. 1.3 / Max. 1.6			Typ. 1.3 / Max. 1.6
Insulation Resistance (MΩ)	Min. 500			Min. 500
Specifications Number	STD-MUD-2	STD-MUD-3	STD-MUD-1	Refer to *2

Please specify the model name, frequency, and specification number when you order products.
For futher questions regarding specifications, please feel free to contact us.
*1 If you have any other requests, NDK will study it.
*2 Ordering information: Overtone Order Fundamental, the Operating Temperature Range, Frequency Tolerance, and Load Capacitance.
Ex. Model, Frequency (32.768000kHz 6digits),
S1:Fundamental - Operating Range(-40 to +85°C) - Frequency Tolerance($\pm 20\times10^{-6}$) - Load Capacitance (9pF)
NX1610SA
32.768000kHz
S1-4085-20-9

■ Dimensions

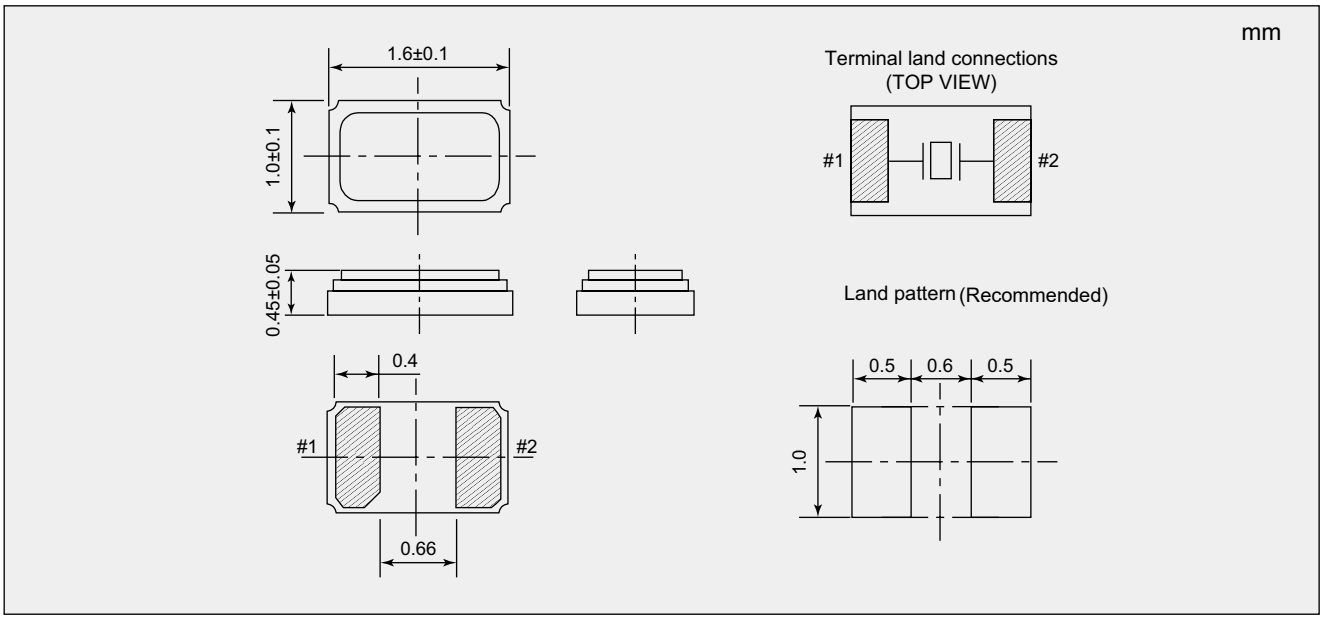

NX1610SE

For OA / AV / Mobile Communications

■ Features

Tuning fork crystal unit with low ESR(Equivalent Series Resistance).

- ●Low ESR achieves low power consumption.
- ●Excellent electric performance optimum for mobile communications, OA (office automation) and AV (audiovisual) applications are exhibited.
- ●A surface-mount crystal oscillator. (Reflow soldering is possible.)
- ●Lead-free. Meets the requirements for re-flow profiling using lead-free solder.

Pb Free

RoHS Compliant
Directive 2011/65/EU
Directive (EU) 2015/863

■ Specifications

Item \ Model	NX1610SE			
Standard	Standard			Optional
Nominal Frequency (kHz)	32.768			32.768
Operating Temperature Range (°C)	–40 to +85			–40 to +85 *1
Storage Temperature Range (°C)	–40 to +85			–40 to +85 *1
Level of Drive (μW)	0.1 (Max. 0.5)			0.1 (Max. 0.5) *1
Frequency Tolerance (25 ±3 °C)	$\pm 20 \times 10^{-6}$			$\pm 20 \times 10^{-6}$
Turning Point (°C)	+25 ± 5			+25 ± 5
Temperature Coefficient (/°C²)	Max. -0.04×10^{-6}			Max. -0.04×10^{-6}
Load Capacitance (pF)	6.0	9.0	12.5	6.0 to 12.5
Equivalent Series Resistance (kΩ)	Max. 60 (Typ. 45)			Max. 60 *1
Shunt Capacitance (pF)	Typ. 1.55 / Max. 1.85			Typ. 1.55 / Max. 1.85
Insulation Resistance (MΩ)	Min. 500			Min. 500
Specifications Number	STD-MUD-6	STD-MUD-5	STD-MUD-4	Refer to *2

Please specify the model name, frequency, and specification number when you order products.
For futher questions regarding specifications, please feel free to contact us.
*1 If you have any other requests, NDK will study it.
*2 Ordering information: Overtone Order Fundamental, the Operating Temperature Range, Frequency Tolerance, and Load Capacitance.
Ex. Model, Frequency (32.768000kHz 6digits),
S1:Fundamental - Operating Range(-40 to +85°C) - Frequency Tolerance($\pm 20 \times 10^{-6}$) - Load Capacitance (9pF)
NX1610SE
32.768000kHz
S1-4085-20-9

■ Dimensions

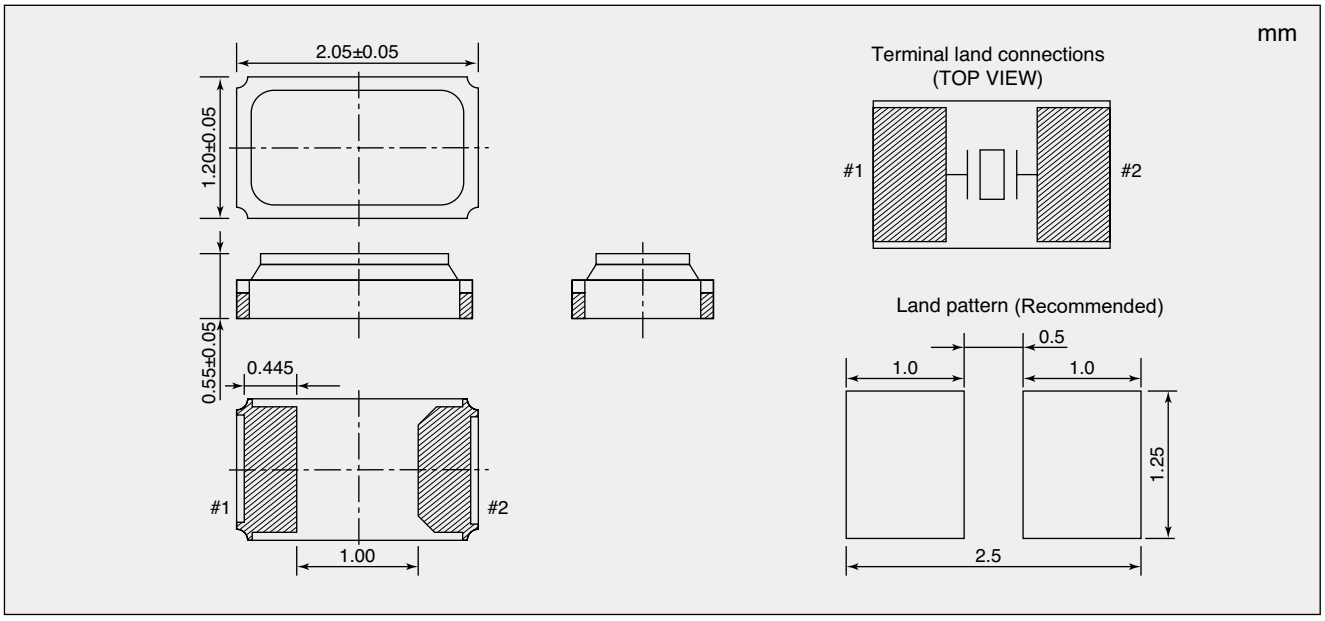

NX2012SA

For OA / AV / Mobile Communication / Automotives

■ Features

Compact, thin, and light weight tuning fork crystal unit.

- ●Compact and thin. (2.0×1.2×0.55mm)
- ●Excellent electric performance optimum for mobile communications, OA (office automation) and AV (audiovisual) applications are exhibited.
- ●A surface-mount crystal oscillator. (Reflow soldering is possible.)
- ●RoHS compliant. These can meet the requirements of re-flow profiling using leadfree solder.
- ●Conforms to AEC-Q200. (For Automotives)

Pb Free

RoHS Compliant
Directive 2011/65/EU
Directive (EU) 2015/863

■ Specifications

Item \ Model	NX2012SA						
Standard	Standard						Optional
Main Application	For OA / AV / Mobile Communication			For Automotive			For OA / AV / Mobile Communication/ Automotive
Nominal Frequency (kHz)	32.768						32.768
Operating Temperature Range (°C)	−40 to +85			−40 to +125			−40 to +85 *1
Storage Temperature Range (°C)	−40 to +85			−40 to +125			−40 to +85 *1
Level of Drive (μW)	0.1 (Max. 0.5)						0.1 (Max. 0.5) *1
Frequency Tolerance (25 ±3 °C)	$\pm 20 \times 10^{-6}$						$\pm 20 \times 10^{-6}$
Turning Point (°C)	+25 ± 5						+25 ± 5
Temperature Coefficient (/°C²)	Max. -0.04×10^{-6}						Max. -0.04×10^{-6}
Load Capacitance (pF)	6.0	9.0	12.5	6.0	9.0	12.5	6.0 to 12.5 *1
Equivalent Series Resistance (kΩ)	Max. 80			Max. 120			Max. 80 *1
Shunt Capacitance (pF)	Typ. 1.3/ Max. 1.6						Typ. 1.3/ Max. 1.6
Insulation Resistance (MΩ)	Min. 500						Min. 500
Specifications Number	STD-MUB-3	STD-MUB-2	STD-MUB-1	STD-MUT-3	STD-MUT-2	STD-MUT-1	Refer to *2

Please specify the model name, frequency, and specification number when you order products.
For futher questions regarding specifications, please feel free to contact us.
*1 If you have any other requests, NDK will study it.
*2 Ordering information: Overtone Order Fundamental, the Operating Temperature Range, Frequency Tolerance, and Load Capacitance.
Ex. Model, Frequency (32.768000kHz 6digits),
S1:Fundamental - Operating Range(-40 to +85°C) - Frequency Tolerance($\pm 20 \times 10^{-6}$) - Load Capacitance (9pF)
NX2012SA
32.768000kHz
S1-4085-20-9

■ Dimensions

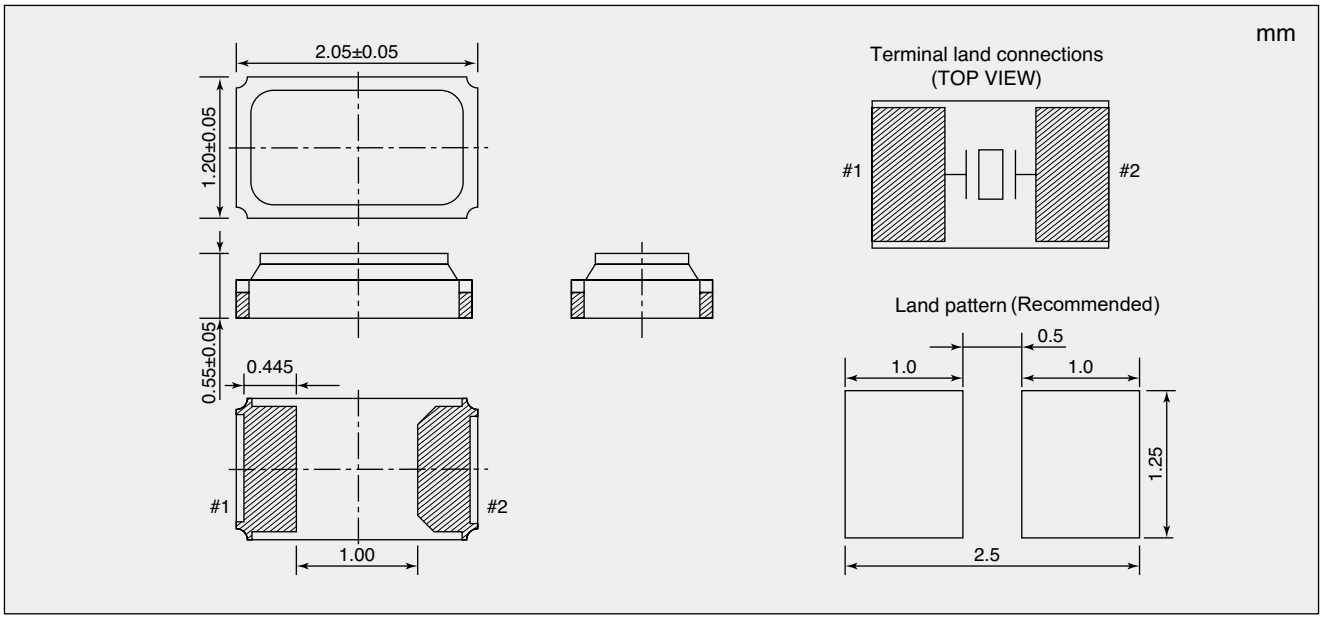

NX2012SE

For OA / AV / Mobile Communications

■ Features

Tuning fork crystal unit with low ESR(Equivalent Series Resistance).

- ●Supports Microcontroller requiring low ESR. (ESR:Max. 50kΩ)
- ●Excellent electric performance optimum for mobile communications, OA (office automation) and AV (audiovisual) applications are exhibited.
- ●A surface-mount crystal oscillator. (Reflow soldering is possible.)
- ●Lead-free. Meets the requirements for re-flow profiling using lead-free solder.

Pb Free

RoHS Compliant
Directive 2011/65/EU
Directive (EU) 2015/863

■ Specifications

Item \ Model	NX2012SE			
Standard	Standard			Optional
Nominal Frequency (kHz)	32.768			32.768
Operating Temperature Range (°C)	–40 to +85			–40 to +85 *1
Storage Temperature Range (°C)	–40 to +85			–40 to +85 *1
Level of Drive (μW)	0.1 (Max. 0.5)			0.1 (Max. 0.5) *1
Frequency Tolerance (25 ±3 °C)	$\pm 20 \times 10^{-6}$			$\pm 20 \times 10^{-6}$
Turning Point (°C)	+25 ± 5			+25 ± 5
Temperature Coefficient (/°C²)	Max. -0.04×10^{-6}			Max. -0.04×10^{-6}
Load Capacitance (pF)	6.0	9.0	12.5	6.0 to 12.5
Equivalent Series Resistance (kΩ)	Max. 50 (Typ. 35)			Max. 50 *1
Shunt Capacitance (pF)	Typ. 1.7 / Max. 2.0			Typ. 1.7 / Max. 2.0
Insulation Resistance (MΩ)	Min. 500			Min. 500
Specifications Number	STD-MUB-8	STD-MUB-9	STD-MUB-10	Refer to *2

Please specify the model name, frequency, and specification number when you order products.
For futher questions regarding specifications, please feel free to contact us.
*1 If you have any other requests, NDK will study it.
*2 Ordering information: Overtone Order Fundamental, the Operating Temperature Range, Frequency Tolerance, and Load Capacitance.
Ex. Model, Frequency (32.768000kHz 6digits),
S1:Fundamental - Operating Range(-40 to +85°C) - Frequency Tolerance($\pm 20 \times 10^{-6}$) - Load Capacitance (9pF)
NX2012SE
32.768000kHz
S1-4085-20-9

■ Dimensions

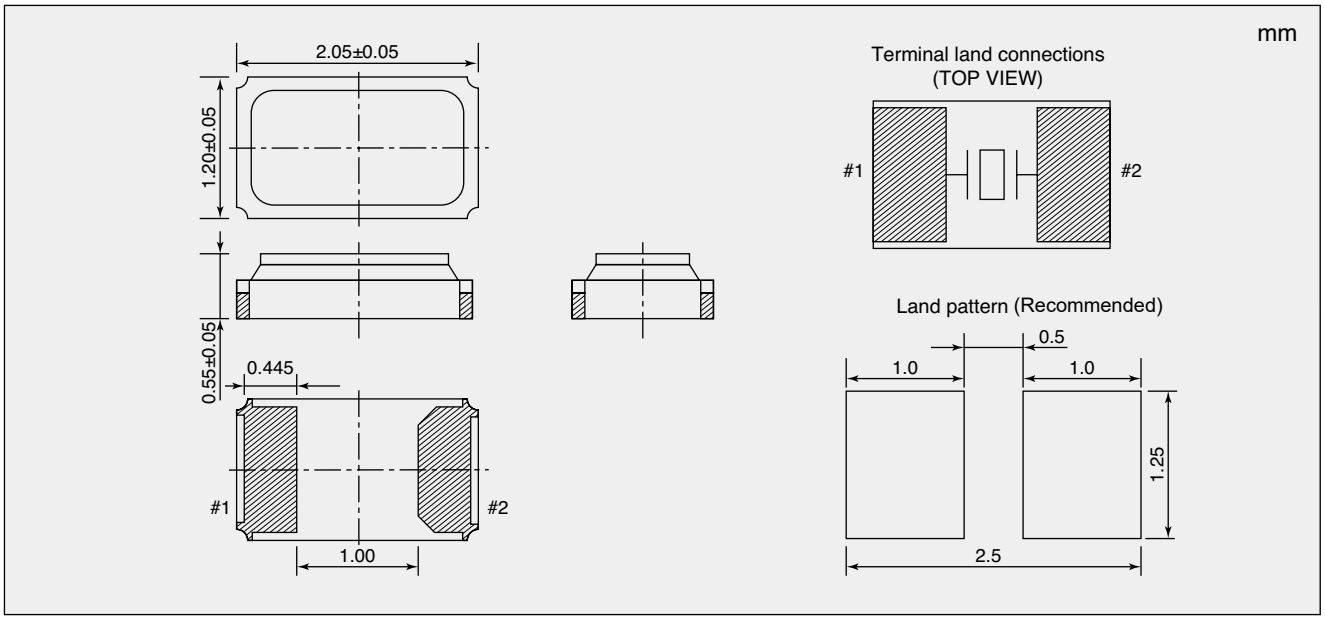

Crystal Units

NX3215SA For OA / AV / Mobile Communication / Automotives

■ Features

Compact, thin, and light weight tuning fork crystal unit.

- ●Excellent electric performance optimum for mobile communications, OA (office automation) and AV (audiovisual) applications are exhibited. (For OA / AV / Mobile Communication)
- ●Excellent heat resistance and environmental characteristics. (For Automotives)
- ●Meet the requirements for re-flow profiling using lead-free solder.
- ●Conforms to AEC-Q200. (For Automotives)

Pb Free

RoHS Compliant
Directive 2011/65/EU
Directive (EU) 2015/863

■ Specifications

Item \ Model	NX3215SA						
Standard	Standard						Optional
Main Application	For OA / AV / Mobile Communication			For Automotive			For OA / AV / Mobile Communication/ Automotive
Nominal Frequency (kHz)	32.768						32.768
Operating Temperature Range (°C)	−40 to +85			−40 to +125			−40 to +85 *1
Storage Temperature Range (°C)	−40 to +85			−40 to +125			−40 to +85 *1
Level of Drive (μW)	0.1 (Max. 0.5)						0.1 (Max. 0.5) *1
Frequency Tolerance (25 ±3 °C)	$\pm 20 \times 10^{-6}$						$\pm 20 \times 10^{-6}$
Turning Point (°C)	+25 ± 5						+25 ± 5
Temperature Coefficient (/°C²)	Max. -0.04×10^{-6}						Max. -0.04×10^{-6}
Load Capacitance (pF)	6.0	9.0	12.5	6.0	9.0	12.5	6.0 to 12.5 *1
Equivalent Series Resistance (kΩ)	Max. 70			Max. 80			Max. 70 *1
Shunt Capacitance (pF)	Typ. 1.0 / Max.1.5						Typ. 1.0 / Max.1.5
Insulation Resistance (MΩ)	Min. 500						Min. 500
Specifications Number	STD-MUA-14	STD-MUA-9	STD-MUA-8	STD-MUS-4	STD-MUS-3	STD-MUS-2	Refer to *2

Please specify the model name, frequency, and specification number when you order products.
For futher questions regarding specifications, please feel free to contact us.
*1 If you have any other requests, NDK will study it.
*2 Ordering information: Overtone Order Fundamental, the Operating Temperature Range, Frequency Tolerance, and Load Capacitance.
Ex. Model, Frequency (32.768000kHz 6digits),
S1:Fundamental - Operating Range(-40 to +85°C) - Frequency Tolerance($\pm 20 \times 10^{-6}$) - Load Capacitance (9pF)
NX3215SA
32.768000kHz
S1-4085-20-9

■ Dimensions

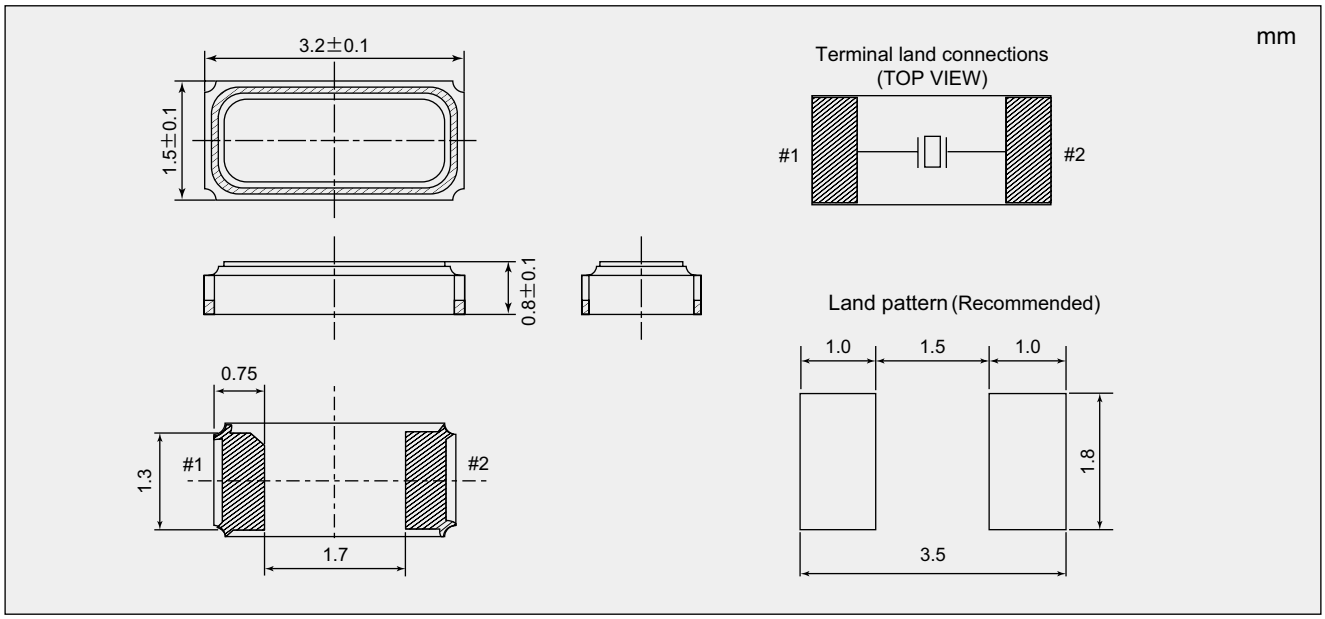

NX3215SE

For OA / AV / Mobile Communications

■ Features

Tuning fork crystal unit with low ESR(Equivalent Series Resistance).

- ●Supports Microcontroller requiring low ESR. (ESR:Max. 40kΩ)
- ●Excellent electric performance optimum for mobile communications, OA (office automation) and AV (audiovisual) applications are exhibited.
- ●A surface-mount crystal oscillator. (Reflow soldering is possible.)
- ●Lead-free. Meets the requirements for re-flow profiling using lead-free solder.

Pb Free

RoHS Compliant
Directive 2011/65/EU
Directive (EU) 2015/863

■ Specifications

Item \ Model	NX3215SE			
Standard	Standard			Optional
Nominal Frequency	32.768kHz			32.768kHz
Operating Temperature Range (°C)	–40 to +85			–40 to +85 *1
Storage Temperature Range (°C)	–40 to +85			–40 to +85 *1
Level of Drive (μW)	0.1 (Max. 0.5)			0.1 (Max. 0.5) *1
Frequency Tolerance (25 ±3 °C)	±20 × 10^{-6}			±20 × 10^{-6} *1
Turning Point (°C)	+25 ± 5			+25 ± 5
Temperature Coefficient (/°C^2)	Max. –0.04 × 10^{-6}			Max. –0.04 × 10^{-6}
Load Capacitance (pF)	6.0	9.0	12.5	6.0 to 12.5 *1
Equivalent Series Resistance (kΩ)	Max. 40 (Typ. 20)			Max. 40 *1
Shunt Capacitance (pF)	Typ. 1.3 / Max. 1.6			Typ. 1.3 / Max. 1.6
Insulation Resistance (MΩ)	Min. 500			Min. 500
Specifications Number	STD-MUA-19	STD-MUA-18	STD-MUA-17	Refer to *2

Please specify the model name, frequency, and specification number when you order products.
For futher questions regarding specifications, please feel free to contact us.
*1 If you have any other requests, NDK will study it.
*2 Ordering information: Overtone Order Fundamental, the Operating Temperature Range, Frequency Tolerance, and Load Capacitance.
Ex. Model, Frequency (32.768000kHz 6digits),
S1:Fundamental - Operating Temperature Range (-40 to +85°C) - Frequency Tolerance (±20×10^{-6}) - Load Capacitance (9pF)
NX3215SE
32.768000kHz
S1-4085-20-9

■ Dimensions

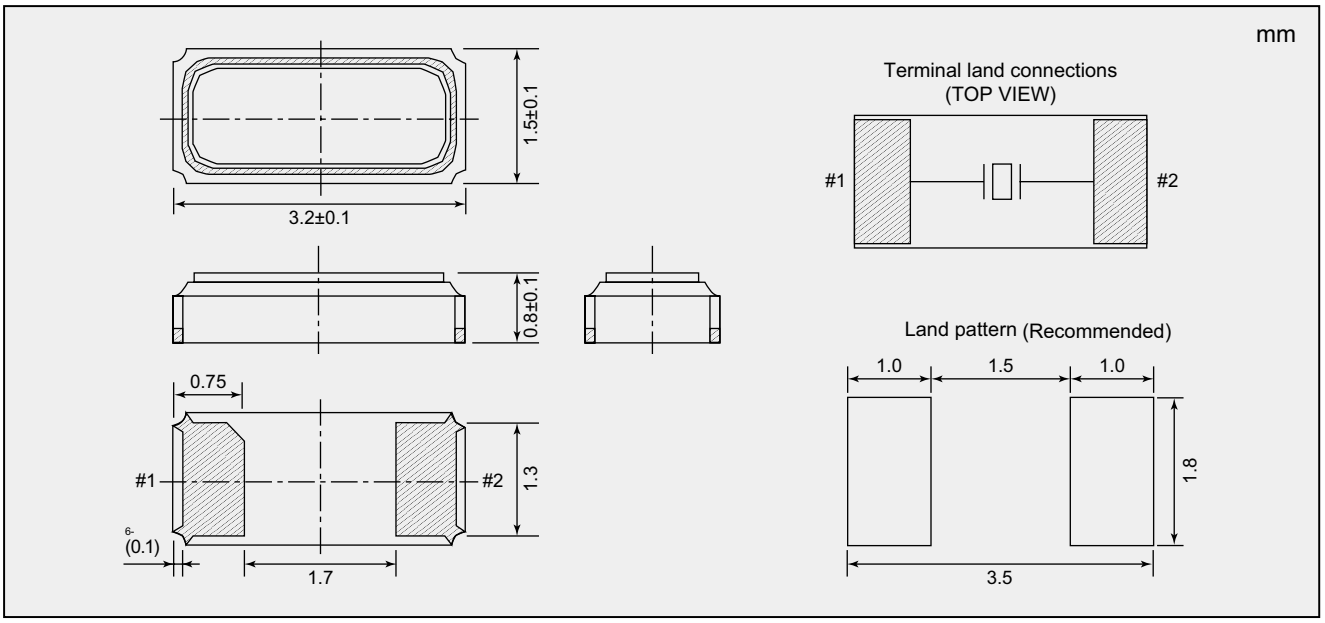

NX3215SD

For Automotive

■ Features

Small surface-mount type tuning fork crystal unit for automotive.High resistance to solder cracking.

- ●Excellent heat resistance and environmental characteristics.
- ●A surface-mount crystal oscillator. (Reflow soldering is possible.)
- ●Meet the requirements for re-flow profiling using lead-free solder.
- ●Conforms to AEC-Q200.

Pb Free

RoHS Compliant
Directive 2011/65/EU
Directive (EU) 2015/863

■ Specifications

Item \ Model	NX3215SD			
Standard	Standard			Optional
Nominal Frequency (kHz)	32.768			32.768
Operating Temperature Range (°C)	−40 to +125			−40 to +125 *1
Storage Temperature Range (°C)	−40 to +125			−40 to +125 *1
Level of Drive (μW)	0.1 (Max. 0.5)			0.1 (Max. 0.5) *1
Frequency Tolerance (25 ±3 °C)	$\pm 20 \times 10^{-6}$			$\pm 20 \times 10^{-6}$ *1
Turning Point (°C)	+25 ± 5			+25 ± 5
Temperature Coefficient (/°C²)	Max. -0.04×10^{-6}			Max. -0.04×10^{-6}
Load Capacitance (pF)	6.0	9.0	12.5	6.0 to 12.5 *1
Equivalent Series Resistance (kΩ)	Max. 80			Max. 80 *1
Shunt Capacitance (pF)	Typ. 1.2 / Max.1.5			Typ. 1.2 / Max.1.5
Insulation Resistance (M Ω)	Min. 500			Min. 500
Specifications Number	STD-MUS-7	STD-MUS-6	STD-MUS-5	Refer to *2

Please specify the model name, frequency, and specification number when you order products.
For futher questions regarding specifications, please feel free to contact us.
*1 If you have any other requests, NDK will study it.
*2 Ordering information: Overtone Order Fundamental, the Operating Temperature Range, Frequency Tolerance, and Load Capacitance.
Ex. Model, Frequency (32.768000kHz 6digits),
S1:Fundamental - Operating Temperature Range (-40 to +85°C) - Frequency Tolerance($\pm 20\times 10^{-6}$) - Load Capacitance (9pF)
NX3215SD
32.768000kHz
S1-4085-20-9

■ Dimensions

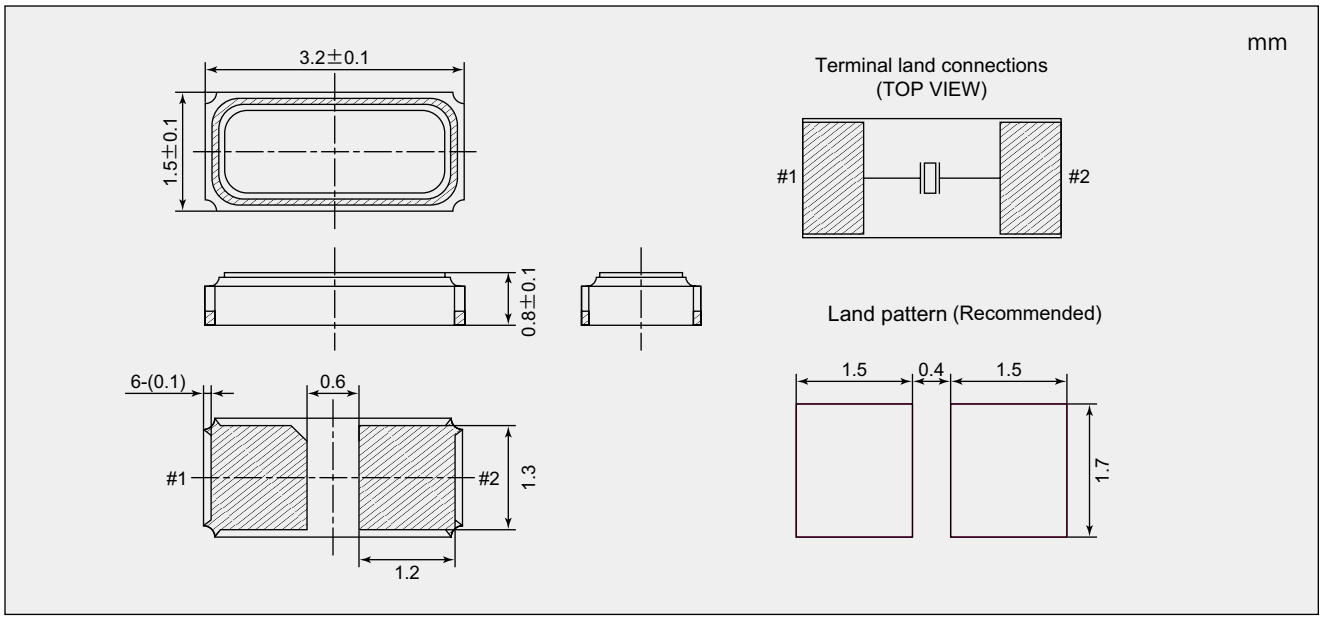

NX3215SF

For Specially controlled medical devices Class III

■ Features

Compact, thin, and light weight tuning fork crystal unit.

- ●High quality has been achieved through process design compatible with specially controlled medical devices class III.
- ●Excellent heat resistance and environmental characteristics ensure high reliability.
- ●Meet the requirements for re-flow profiling using lead-free solder.

Pb Free

RoHS Compliant
Directive 2011/65/EU
Directive (EU) 2015/863

■ Specifications

Item \ Model	NX3215SF			
Standard	Standard			Optional
Nominal Frequency (kHz)	32.768			32.768
Operating Temperature Range (°C)	−40 to +125			−40 to +125 *1
Storage Temperature Range (°C)	−40 to +125			−40 to +125 *1
Level of Drive (μW)	0.1 (Max. 0.5)			0.1 (Max. 0.5) *1
Frequency Tolerance (25 ±3 °C)	$\pm 20 \times 10^{-6}$			$\pm 20 \times 10^{-6}$
Turning Point (°C)	+25 ± 5			+25 ± 5
Temperature Coefficient (/°C²)	Max. -0.04×10^{-6}			Max. -0.04×10^{-6}
Load Capacitance	6.0	9.0	12.5	6.0 to 12.5
Equivalent Series Resistance (kΩ)	Max. 80			Max. 70 *1
Shunt Capacitance (pF)	Typ. 1.0 / Max.1.5			Typ. 1.0 / Max.1.5
Insulation Resistance (MΩ)	Min. 500			Min. 500
Specifications Number	STD-MUP-1	STD-MUP-2	STD-MUP-3	Refer to *2

Please specify the model name, frequency, and specification number when you order products.
For futher questions regarding specifications, please feel free to contact us.
*1 If you have any other requests, NDK will study it.
*2 Ordering information: Overtone Order Fundamental, the Operating Temperature Range, Frequency Tolerance, and Load Capacitance.
Ex. Model, Frequency (32.768000kHz 6digits),
S1:Fundamental - Operating Range(-40 to +85°C) - Frequency Tolerance($\pm 20\times10^{-6}$) - Load Capacitance (9pF)
NX3215SF
32.768000kHz
S1-4085-20-9

■ Dimensions

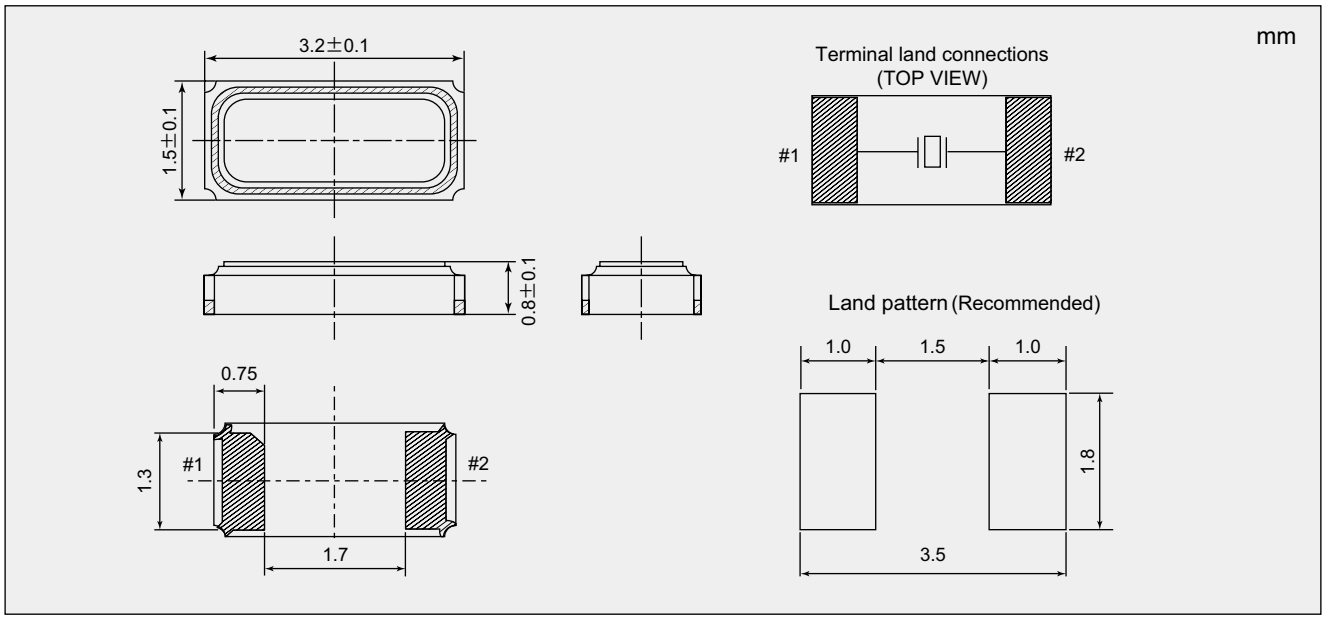

NX1210AC

For Mobile Communications

■ Features

Crystal Unit with built-in Thermistor construction.

- Minimize circuit design space by combining crystal unit into one component. (Presently, Crystal unit and temperature sensor is mounted in one board separately.)
- Placing temperature sensor(Thermistor) close to Crystal blank in one airtight housing can detect more precise crystal blank temperature. Improvement on frequency temperature compensation compared to present Crystal unit.
- Single cavity housing which is ideal to module applications.
- External configuration size is 1.2x1.0mm typ., H0.55 mm Max.
- A surface-mount crystal oscillator. (Reflow soldering is possible.)
- Lead-free. Meets the requirements for re-flow profiling using lead-free solder.

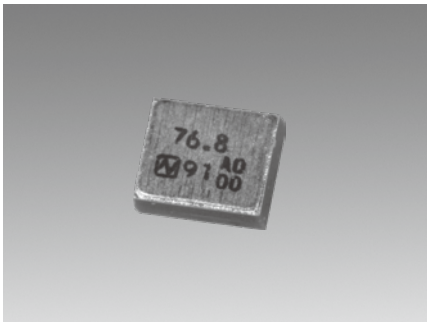

Pb Free

RoHS Compliant
Directive 2011/65/EU
Directive (EU) 2015/863

■ Specifications

Item \ Model	NX1210AC	
Standard	Standard	Optional
Nominal Frequency (MHz)	38.4 ≤ F ≤ 96	38.4 ≤ F ≤ 96
Overtone Order	Fundamental	Fundamental
Frequency Tolerance (25 ± 3°C)	$\pm 12 \times 10^{-6}$	$\pm 12 \times 10^{-6}$
Frequency versus Temperature Characteristics (with reference to +24.5 °C)	$\pm 12 \times 10^{-6}$	Please contact us about temp extended case, *1
Operating Temperature Range (°C)	−30 to +85	Please contact us about temp extended case, *1
Storage Temperature Range (°C)	−40 to +85	−40 to +85
Equivalent Series Resistance	Refer to *2	Refer to *2
Level of Drive (μW)	10 (Max. 100)	10 (Max. 100)
Load Capacitance (pF)	7	6 to 12
Frequency Aging (+25°C)	---	Max. $\pm 3 \times 10^{-6}$ / year *1
Specifications Number	STD-CTR-1	Refer to *3

Please specify the model name,frequency,and specification number when you order products.
For futher questions regarding specifications, please feel free to contact us.
*1 If you have any other requests, NDK will study it.
*3 Ordering information: Overtone Order Fundamental / 3rd Overtone, the Operating Temperature Range, Frequency versus Temperature Characteristics, Frequency Tolerance, and Load Capacitance.
Ex. Model, Frequency (38.400000MHz 6digits), S1:Fundamental or S3:3rd Overtone
- Operating Temperature Range (-30 to +85°C) - Frequency versus Temperature Characteristics ($\pm 12\times10^{-6}$)
- Frequency Tolerance ($\pm 12\times10^{-6}$) - Load Capacitance (7pF)

NX1210AC
38.400000MHz
S1-3085-12-12-7

■ Dimensions

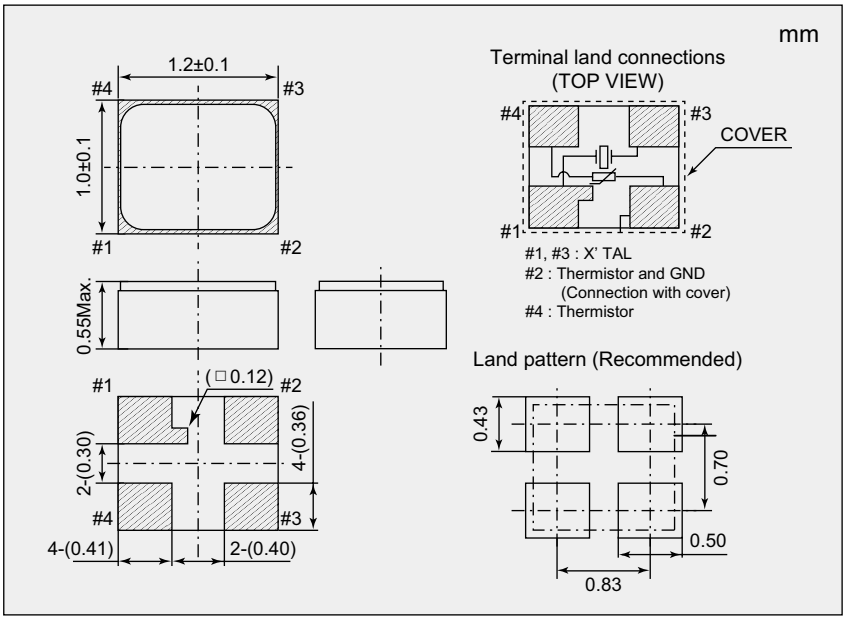

*2 Equivalent Series Resistance

Nominal Frequency (MHz)	Equivalent Series Resistance Max. (Ω)
38.4 ≤ F < 52	60
52 ≤ F < 76.8	50
76.8 ≤ F ≤ 96	40

NTC Thermistor for Temperature Sensor

Resistance (R25)	100k Ω ± 1 %
B-Constant (B25-50)	4250K ± 1 %

NX1612SD

For Mobile Communications

■ Features

Crystal Unit with built-in Thermistor construction.

- Minimize circuit design space by combining crystal unit into one component.
  (Presently, Crystal unit and temperature sensor is mounted in one board separately.)
- Placing temperature sensor(Thermistor) close to Crystal blank in one airtight housing can detect more precise crystal blank temperature. Improvement on frequency temperature compensation compared to present Crystal unit.
- Single cavity housing which is ideal to module applications.
- External configuration size is 1.6x1.2mm typ., H0.65 mm Max.
- A surface-mount crystal oscillator. (Reflow soldering is possible.)
- Lead-free. Meets the requirements for re-flow profiling using lead-free solder.

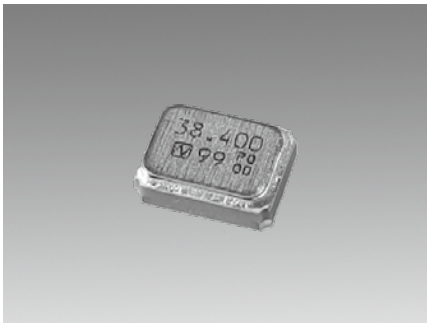

Pb Free

RoHS Compliant
Directive 2011/65/EU
Directive (EU) 2015/863

■ Specifications

Item \ Model	NX1612SD	
Standard	Standard	Optional
Nominal Frequency (MHz)	26 ≤ F ≤ 76.8	26 ≤ F ≤ 76.8
Overtone Order	Fundamental	Fundamental
Frequency Tolerance (25 ± 3°C)	$\pm 10 \times 10^{-6}$	$\pm 10 \times 10^{-6}$
Frequency versus Temperature Characteristics (with reference to +29 °C)	$\pm 12 \times 10^{-6}$	Please contact us about temp extended case, *1
Operating Temperature Range (°C)	−30 to +85	Please contact us about temp extended case, *1
Storage Temperature Range (°C)	−40 to +105	−40 to +105
Equivalent Series Resistance	Refer to *2	Refer to *2
Level of Drive (μW)	10 (Max. 100)	10 (Max. 100)
Load Capacitance (pF)	8	6 to 18
Frequency Aging (+25°C)	---	Max. $\pm 3 \times 10^{-6}$ / year *1
Specifications Number	STD-CTI-2	Refer to *3

Please specify the model name,frequency,and specification number when you order products.
For futher questions regarding specifications, please feel free to contact us.
*1 If you have any other requests, NDK will study it.
*3 Ordering information: Overtone Order Fundamental / 3rd Overtone, the Operating Temperature Range, Frequency versus Temperature Characteristics, Frequency Tolerance, and Load Capacitance.
Ex. Model, Frequency (38.400000MHz 6digits), S1:Fundamental or S3:3rd Overtone
- Operating Temperature Range (-30 to +85°C) - Frequency versus Temperature Characteristics ($\pm 12 \times 10^{-6}$)
- Frequency Tolerance ($\pm 12 \times 10^{-6}$) - Load Capacitance (7pF)

NX1612SD
38.400000MHz
S1-3085-12-12-7

■ Dimensions

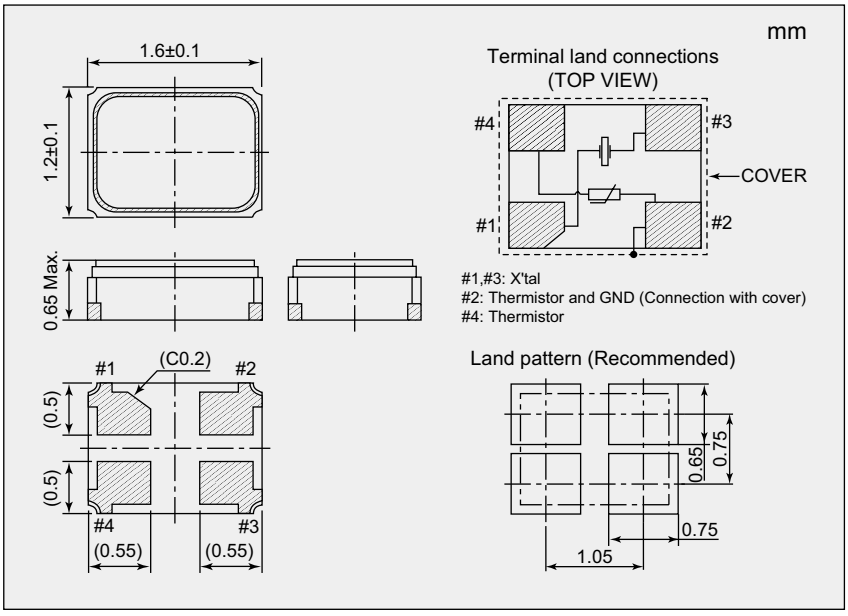

*2 Equivalent Series Resistance

Nominal Frequency (MHz)	Equivalent Series Resistance Max. (Ω)
26 ≤ F < 38.4	80
38.4 ≤ F ≤ 76.8	50

NTC Thermistor for Temperature Sensor

Resistance (R25)	100k Ω ± 1 %
B-Constant (B25-50)	4250K ± 1 %

NX2016SF

For Mobile Communications

■ Features

Crystal Unit with built-in Thermistor construction.

- Minimize circuit design space by combining crystal unit into one component.
  (Presently, Crystal unit and temperature sensor is mounted in one board separately.)
- Placing temperature sensor(Thermistor) close to Crystal blank in one airtight housing can detect more precise crystal blank temperature. Improvement on frequency temperature compensation compared to present Crystal unit.
- Single cavity housing which is ideal to module applications.
- External configuration size is 2.0x1.6mm typ., H0.65 mm Max.
- A surface-mount crystal oscillator. (Reflow soldering is possible.)
- Lead-free. Meets the requirements for re-flow profiling using lead-free solder.

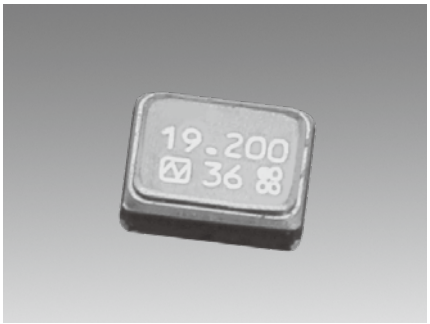

Pb Free

RoHS Compliant
Directive 2011/65/EU
Directive (EU) 2015/863

■ Specifications

Item \ Model	NX2016SF	
Standard	Standard	Optional
Nominal Frequency (MHz)	19.2 ≤ F ≤ 52	19.2 ≤ F ≤ 52
Overtone Order	Fundamental	Fundamental
Frequency Tolerance (25 ± 3°C)	$\pm 10 \times 10^{-6}$	$\pm 10 \times 10^{-6}$
Frequency versus Temperature Characteristics (with reference to +32 °C)	$\pm 12 \times 10^{-6}$	Please contact us about temp extended case, *1
Operating Temperature Range (°C)	−30 to +85	Please contact us about temp extended case, *1
Storage Temperature Range (°C)	−40 to +105	−40 to +105
Equivalent Series Resistance	Refer to *2	Refer to *2
Level of Drive (μW)	10 (Max. 100)	10 (Max. 100)
Load Capacitance (pF)	7	6 to 18
Frequency Aging (+25°C)	---	Max. $\pm 3 \times 10^{-6}$ / year *1
Specifications Number	STD-CTZ-1	Refer to *3

Please specify the model name,frequency,and specification number when you order products.
For futher questions regarding specifications, please feel free to contact us.
*1 If you have any other requests, NDK will study it.
*3 Ordering information: Overtone Order Fundamental / 3rd Overtone, the Operating Temperature Range, Frequency versus Temperature Characteristics, Frequency Tolerance, and Load Capacitance.
Ex. Model, Frequency (38.400000MHz 6digits), S1:Fundamental or S3:3rd Overtone
- Operating Temperature Range (-30 to +85°C) - Frequency versus Temperature Characteristics ($\pm 12\times10^{-6}$)
- Frequency Tolerance ($\pm 12\times10^{-6}$) - Load Capacitance (7pF)

NX2016SF
38.400000MHz
S1-3085-12-12-7

■ Dimensions

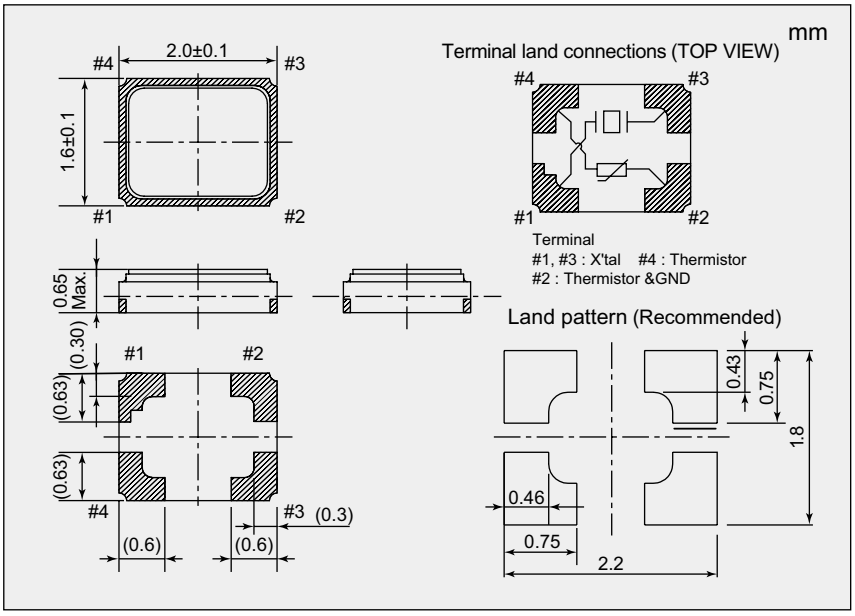

*2 Equivalent Series Resistance

Nominal Frequency (MHz)	Equivalent Series Resistance Max. (Ω)
19.2 ≤ F < 24	80
24 ≤ F ≤ 52	60

NTC Thermistor for Temperature Sensor

Resistance (R25)	100k Ω ± 1 %
B-Constant (B25-50)	4250K ± 1 %

NX2520SG

For Mobile Communications

■ Features

Crystal Unit with built-in Thermistor construction.

- Minimize circuit design space by combining crystal unit into one component. (Presently, Crystal unit and temperature sensor is mounted in one board separately.)
- Placing temperature sensor(Thermistor) close to Crystal blank in one airtight housing can detect more precise crystal blank temperature. Improvement on frequency temperature compensation compared to present Crystal unit.
- Single cavity housing which is ideal to module applications.
- Lead-free. Meets the requirements for re-flow profiling using lead-free solder.

Pb Free

RoHS Compliant
Directive 2011/65/EU
Directive (EU) 2015/863

■ Specifications

Item / Model	NX2520SG	
Standard	Standard	Optional
Nominal Frequency (MHz)	19.2 ≤ F ≤ 54	19.2 ≤ F ≤ 54
Overtone Order	Fundamental	Fundamental
Frequency Tolerance (30 ± 3°C)	$\pm 10 \times 10^{-6}$	$\pm 10 \times 10^{-6}$
Frequency versus Temperature Characteristics (with reference to +30 °C)	$\pm 12 \times 10^{-6}$	Please contact us about temp extended case, *1
Operating Temperature Range (°C)	−30 to +85	Please contact us about temp extended case, *1
Storage Temperature Range (°C)	−40 to +105	−40 to +105
Equivalent Series Resistance	Refer to *2	Refer to *2
Level of Drive (μW)	10 (Max. 100)	10 (Max. 100)
Load Capacitance (pF)	7	6 to 18
Frequency Aging (+25°C)	---	Max. $\pm 3 \times 10^{-6}$ / year *1
Specifications Number	STD-CTX-1	Refer to *3

Please specify the model name,frequency,and specification number when you order products.
For futher questions regarding specifications, please feel free to contact us.
*1 If you have any other requests, NDK will study it.
*3 Ordering information: Overtone Order Fundamental / 3rd Overtone, the Operating Temperature Range, Frequency versus Temperature Characteristics, Frequency Tolerance, and Load Capacitance.
Ex. Model, Frequency (38.400000MHz 6digits), S1:Fundamental or S3:3rd Overtone
- Operating Temperature Range (-30 to +85°C) - Frequency versus Temperature Characteristics ($\pm 12\times10^{-6}$)
- Frequency Tolerance ($\pm 12\times10^{-6}$) - Load Capacitance (7pF)

NX2520SG
38.400000MHz
S1-3085-12-12-7

■ Dimensions

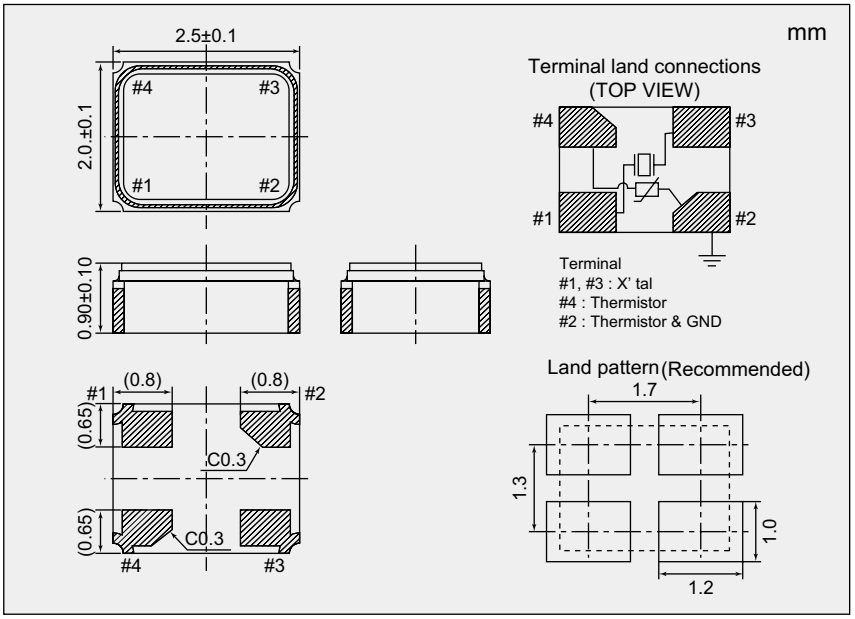

*2 Equivalent Series Resistance

Nominal Frequency (MHz)	Equivalent Series Resistance Max. (Ω)
19.2 ≤ F < 20	70
20 ≤ F < 40	50
40 ≤ F ≤ 54	40

NTC Thermistor for Temperature Sensor

Resistance (R25)	100k Ω ± 1 %
B-Constant (B25-50)	4250K ± 1 %

NX2016SF

For Automotive

■ Features

Crystal Unit with built-in Thermistor construction for automotive.

- Placing temperature sensor(Thermistor) close to Crystal blank in one airtight housing can detect more precise crystal blank temperature. Improvement on frequency temperature compensation compared to present Crystal unit.
- It is ideal for applications such as vehicle communication equipment and car navigation systems.
- Meets the requirements for re-flow profiling using lead-free solder.
- Conforms to AEC-Q200.

Pb Free

RoHS Compliant
Directive 2011/65/EU
Directive (EU) 2015/863

■ Specifications

Item / Model	NX2016SF	
Standard	Standard	Optional
Nominal Frequency (MHz)	19.2 ≤ F ≤ 55.2	19.2 ≤ F ≤ 55.2
Overtone Order	Fundamental	Fundamental
Frequency Tolerance (25°C)	±10 × 10^{-6}	±10 × 10^{-6}
Frequency versus Temperature Characteristics (with reference to +25 °C)	±25 × 10^{-6}	Please contact us about temp extended case, *1
Operating Temperature Range (°C)	−40 to +105	Please contact us about temp extended case, *1
Storage Temperature Range (°C)	−40 to +105	−40 to +105
Equivalent Series Resistance	Refer to *2	Refer to *2
Level of Drive (μW)	10 (Max. 100)	10 (Max. 100)
Load Capacitance (pF)	7	6 to 18
Frequency Aging (+25°C)	---	Max. ±3 × 10^{-6} / year *1
Specifications Number	---	Refer to *3

Please specify the model name,frequency,and specification number when you order products.
For futher questions regarding specifications, please feel free to contact us.
*1 If you have any other requests, NDK will study it.
*3 Ordering information: Overtone Order Fundamental / 3rd Overtone, the Operating Temperature Range, Frequency versus Temperature Characteristics, Frequency Tolerance, and Load Capacitance.
Ex. Model, Frequency (38.400000MHz 6digits), S1:Fundamental or S3:3rd Overtone
- Operating Temperature Range (-40 to +105°C) - Frequency versus Temperature Characteristics (±25×10^{-6})
- Frequency Tolerance (±12×10^{-6}) - Load Capacitance (7pF)

NX2016SF
38.400000MHz
S1-40105-25-12-7

■ Dimensions

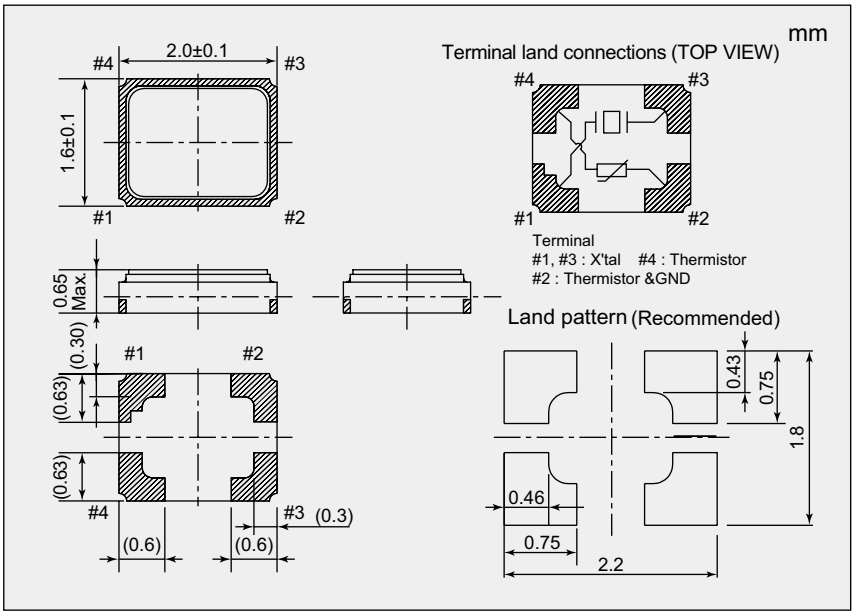

*2 Equivalent Series Resistance

Nominal Frequency (MHz)	Equivalent Series Resistance Max. (Ω)
19.2 ≤ F < 20	70
20 ≤ F < 40	50
40 ≤ F ≤ 55.2	40

NTC Thermistor for Temperature Sensor

Resistance (R25)	100k Ω ± 1 %
B-Constant (B25-50)	4250K ± 1 %

NX1008AA

For OA / AV / Short-range Wireless

■ Features

Ultra compact and thin surface-mount type crystal unit.

- Ultra compact and thin (Typ. 1.0 × 0.8 × H : 0.30mm) .
- Highly reliable crystal unit.
- A product with characteristics best suited for ultra compact Wireless LAN and Bluetooth.(For Short-range Wireless)
- A surface-mount crystal oscillator. (Reflow soldering is possible.)
- Lead-free. Meets the requirements for re-flow profiling using lead-free solder.

Pb Free

RoHS Compliant
Directive 2011/65/EU
Directive (EU) 2015/863

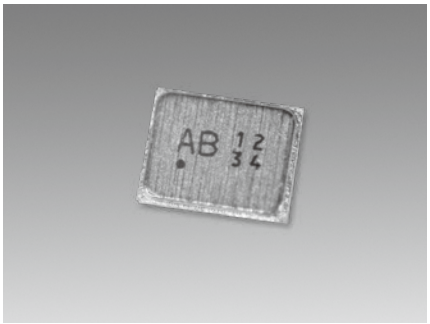

■ Specifications

Item \ Model	NX1008AA		
Standard	Standard		Optional
Nominal Frequency (MHz)	32 ≤ F < 60	60 ≤ F ≤ 80	32 ≤ F ≤ 80
Overtone Order	Fundamental		Fundamental
Frequency Tolerance (25 ±3 °C)	$\pm 10 \times 10^{-6}$		$\pm 10 \times 10^{-6}$
Frequency versus Temperature Characteristics (with reference to +25 °C)	$\pm 10 \times 10^{-6}$	$\pm 15 \times 10^{-6}$	$\pm 25 \times 10^{-6}$ (Temp extended case, *1)
Operating Temperature Range (°C)	−30 to +85		−40 to +85 *1
Storage Temperature Range (°C)	−40 to +85		−40 to +85
Equivalent Series Resistance	Refer to *2		Refer to *2
Level of Drive (μW)	10 (Max. 100)		10 (Max. 100)
Load Capacitance (pF)	8		6 to 12
Frequency Aging (+25°C)	---		Max. $\pm 3 \times 10^{-6}$ / year *1
Specifications Number	STD-CIY-1		Refer to *3

Please specify the model name,frequency,and specification number when you order products.
For futher questions regarding specifications, please feel free to contact us.
*1 If you have any other requests, NDK will study it.
*3 Ordering information: Overtone Order Fundamental / 3rd Overtone, the Operating Temperature Range, Frequency versus Temperature Characteristics, Frequency Tolerance, and Load Capacitance.
Ex. Model, Frequency (38.400000MHz 6digits), S1:Fundamental or S3:3rd Overtone
- Operating Temperature Range (-30 to +85°C) - Frequency versus Temperature Characteristics ($\pm 12 \times 10^{-6}$)
- Frequency Tolerance ($\pm 12 \times 10^{-6}$) - Load Capacitance (7pF)

NX1008AA
38.400000MHz
S1-3085-12-12-7

■ Dimensions

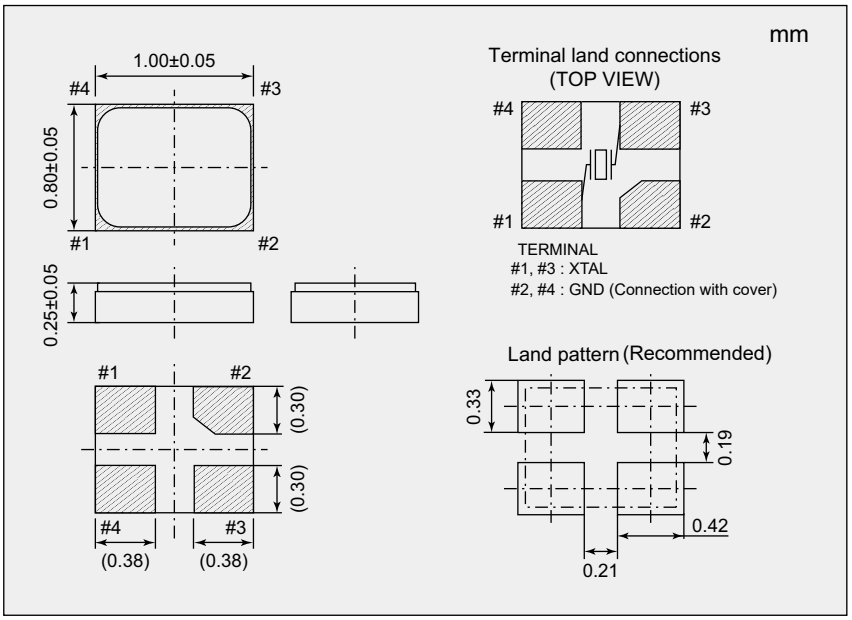

*2 Equivalent Series Resistance

Nominal Frequency (MHz)	Equivalent Series Resistance Max. (Ω)
32 ≤ F < 37.4	150
37.4 ≤ F < 48	80
48 ≤ F ≤ 80	60

If you have any other requests,NDK will study it.

Crystal Units

NX1210AB

For OA / AV / Short-range Wireless

■ Features

Ultra compact and thin surface-mount type crystal unit.

- Ultra compact and thin (Typ. 1.2 × 1.0 × Typ. 0.25 , H : 0.30mm)
- Highly reliable crystal unit.
- A product with characteristics best suited for ultra compact Wireless LAN and Bluetooth.(For Short-range Wireless)
- A surface-mount crystal oscillator. (Reflow soldering is possible.)
- Lead-free. Meets the requirements for re-flow profiling using lead-free solder.

Pb Free

RoHS Compliant
Directive 2011/65/EU
Directive (EU) 2015/863

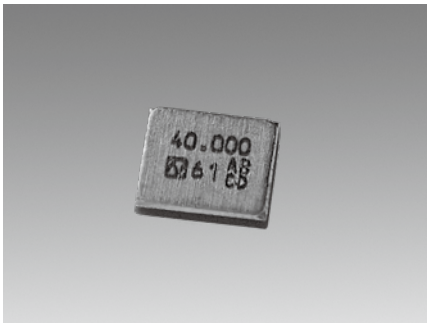

■ Specifications

Item / Model	NX1210AB	
Standard	Standard	Optional
Nominal Frequency (MHz)	26 ≤ F ≤ 52	26 ≤ F ≤ 80
Overtone Order	Fundamental	Fundamental
Frequency Tolerance (25 ±3 °C)	±10 × 10^{-6}	±10 × 10^{-6}
Frequency versus Temperature Characteristics (with reference to +25 °C)	±15 × 10^{-6}	±25 × 10^{-6} (Temp extended case, *1)
Operating Temperature Range (°C)	−30 to +85	−40 to +85 *1
Storage Temperature Range (°C)	−40 to +85	−40 to +85
Equivalent Series Resistance	Refer to *2	Refer to *3
Level of Drive (μW)	10 (Max. 100)	10 (Max. 100)
Load Capacitance (pF)	8	6 to 12
Frequency Aging (+25°C)	---	Max. ±3 × 10^{-6} / year *1
Specifications Number	STD-CIX-1	Refer to *3

Please specify the model name,frequency,and specification number when you order products.
For futher questions regarding specifications, please feel free to contact us.
*1 If you have any other requests, NDK will study it.
*3 Ordering information: Overtone Order Fundamental / 3rd Overtone, the Operating Temperature Range, Frequency versus Temperature Characteristics, Frequency Tolerance, and Load Capacitance.
Ex. Model, Frequency (38.400000MHz 6digits), S1:Fundamental or S3:3rd Overtone
- Operating Temperature Range (-30 to +85°C) - Frequency versus Temperature Characteristics (±12×10^{-6})
- Frequency Tolerance (±12×10^{-6}) - Load Capacitance (7pF)

NX1210AB
38.400000MHz
S1-3085-12-12-7

■ Dimensions

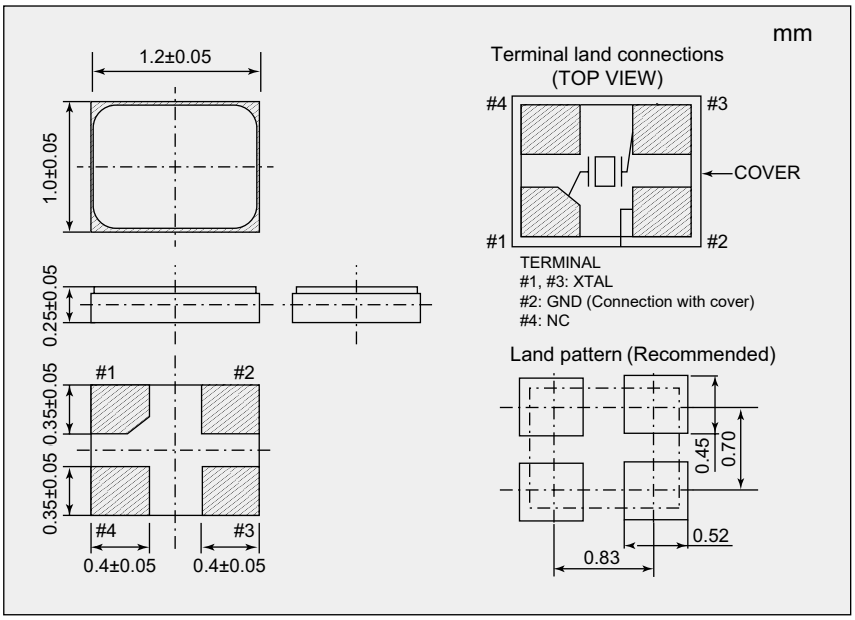

*2 Equivalent Series Resistance

Nominal Frequency (MHz)	Equivalent Series Resistance Max. (Ω)
26 ≤ F < 32	150
32 ≤ F < 40	100
40 ≤ F ≤ 52	60

*3 Equivalent Series Resistance

Nominal Frequency (MHz)	Equivalent Series Resistance Max. (Ω)
26 ≤ F < 32	150
32 ≤ F < 40	100
40 ≤ F ≤ 52	80
52 < F ≤ 80	60

NX1612SA

For OA / AV / Short-range Wireless

■ Features

A small and thin surface-mount type crystal unit.

- Ideal for Wearable device and Short-range Wireless module.
- Ultra compact and thin (Typ. 1.6 × 1.2 × 0.3 mm)
- Lead-free. Meets the requirements for re-flow profiling using lead-free solder.

Pb Free

RoHS Compliant
Directive 2011/65/EU
Directive (EU) 2015/863

■ Specifications

Item \ Model	NX1612SA	
Standard	Standard	Optional
Nominal Frequency (MHz)	24 ≤ F ≤ 80	24 ≤ F ≤ 80
Overtone Order	Fundamental	Fundamental
Frequency Tolerance (25 ±3 °C)	±10 × 10^{-6}	±10 × 10^{-6}
Frequency versus Temperature Characteristics (with reference to +25 °C)	±15 × 10^{-6}	±25 × 10^{-6} (Temp extended case, *1)
Operating Temperature Range (°C)	−30 to +85	−40 to +85 *1
Storage Temperature Range (°C)	−40 to +85	−40 to +85
Equivalent Series Resistance	Refer to *2	Refer to *2
Level of Drive (μW)	10 (Max. 100)	10 (Max. 100)
Load Capacitance (pF)	8	6 to 18
Frequency Aging	---	Max. ±3 × 10^{-6} / year *1
Specifications Number	STD-CIS-3	Refer to *3

Please specify the model name,frequency,and specification number when you order products.
For futher questions regarding specifications, please feel free to contact us.
*1 If you have any other requests, NDK will study it.
*3 Ordering information: Overtone Order Fundamental / 3rd Overtone, the Operating Temperature Range, Frequency versus Temperature Characteristics, Frequency Tolerance, and Load Capacitance.
Ex. Model, Frequency (38.400000MHz 6digits), S1:Fundamental or S3:3rd Overtone
- Operating Temperature Range (-30 to +85°C) - Frequency versus Temperature Characteristics (±12×10^{-6})
- Frequency Tolerance (±12×10^{-6}) - Load Capacitance (7pF)

NX1612SA
38.400000MHz
S1-3085-12-12-7

■ Dimensions

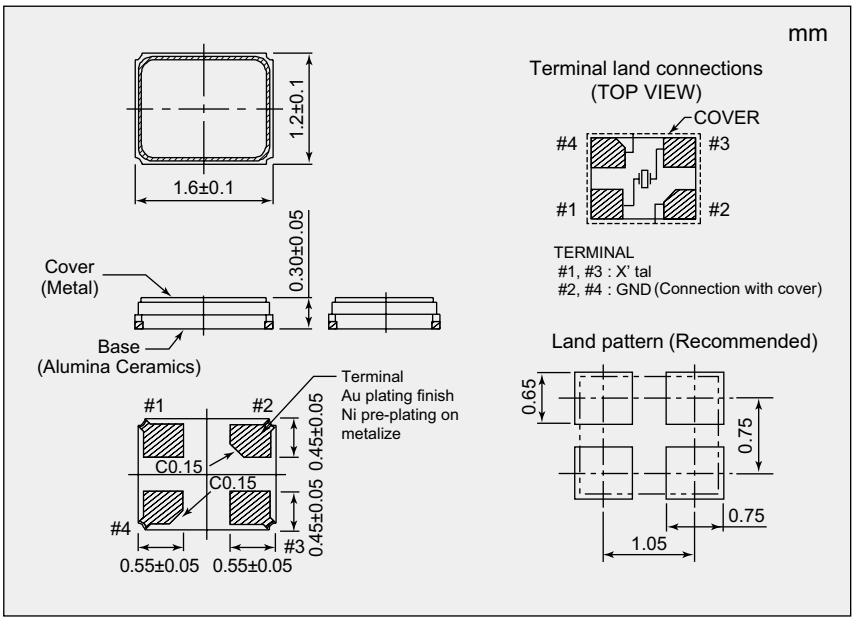

*2 Equivalent Series Resistance

Nominal Frequency (MHz)	Equivalent Series Resistance Max. (Ω)
24 ≤ F < 32	150
32 ≤ F < 38	100
38 ≤ F ≤ 80	80

NX1612SA

For Automotive

■ Features

A small and thin surface-mount type crystal unit for automotive.

- ●Ultra compact and thin. (1.6 × 1.2 × 0.3 mm)
- ●Stable start-up characteristics even under extremely severe environmental conditions.
- ●Excellent environmental characteristics, including heat, vibration and shock resistance.
- ●Lead-free. Meets the requirements for re-flow profiling using lead-free solder.
- ●Conforms to AEC-Q200

Pb Free

RoHS Compliant
Directive 2011/65/EU
Directive (EU) 2015/863

■ Specifications

Item / Model	NX1612SA	
Standard	Standard	Optional
Nominal Frequency (MHz)	24 ≤ F ≤ 80	24 ≤ F ≤ 80
Overtone Order	Fundamental	Fundamental
Frequency Tolerance (25 ±3 °C)	±15 × 10^{-6}	±15 × 10^{-6}
Frequency versus Temperature Characteristics (with reference to +25 °C)	±50 × 10^{-6}	±50 × 10^{-6} (Temp extended case, *1)
Operating Temperature Range (°C)	−40 to +125	−40 to +125
Storage Temperature Range (°C)	−40 to +125	−40 to +125
Equivalent Series Resistance	Refer to *2	Refer to *2
Level of Drive (μW)	10 (Max. 200)	10 (Max. 200)
Load Capacitance (pF)	8	6 to 18
Frequency Aging (+25°C)	---	Max. ±3 × 10^{-6}/year *1
Specifications Number	STD−CIC-1	Refer to *3

Please specify the model name,frequency,and specification number when you order products.
For futher questions regarding specifications, please feel free to contact us.
*1 If you have any other requests, NDK will study it.
*3 Ordering information: Overtone Order Fundamental / 3rd Overtone, the Operating Temperature Range, Frequency versus Temperature Characteristics, Frequency Tolerance, and Load Capacitance.
Ex. Model, Frequency (38.400000MHz 6digits), S1:Fundamental or S3:3rd Overtone
- Operating Temperature Range (-40 to +125°C) - Frequency versus Temperature Characteristics (±50×10^{-6})
- Frequency Tolerance (±15×10^{-6}) - Load Capacitance (7pF)

NX1612SA
38.400000MHz
S1-40125-50-15-7

■ Dimensions

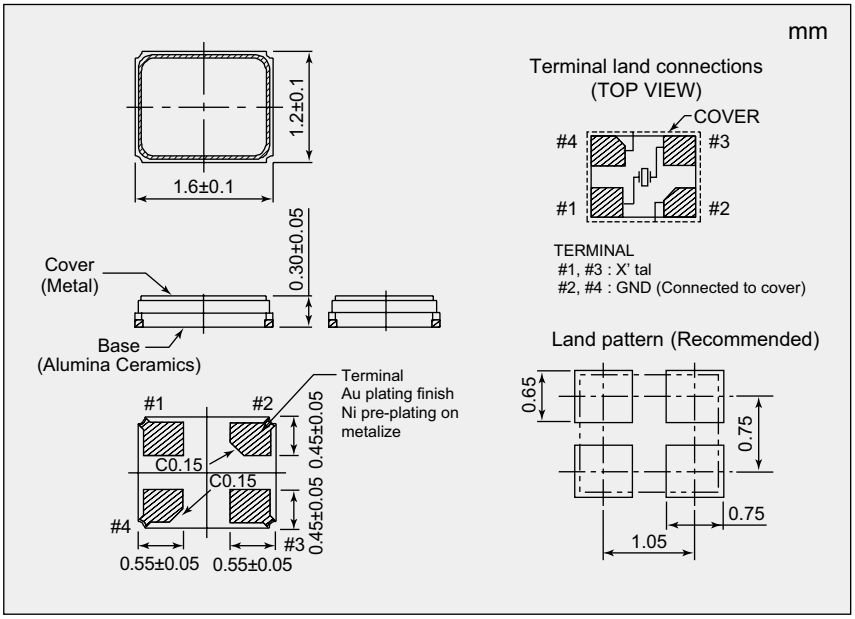

*2 Equivalent Series Resistance

Nominal Frequency (MHz)	Equivalent Series Resistance Max. (Ω)
24 ≤ F < 32	150
32 ≤ F < 38	100
38 ≤ F ≤ 80	80

If you have any other requests,NDK will study it.

NX2016SA For OA / AV/ Short-range Wireless

■ Features

A small and thin surface-mount type crystal unit, especially suited for small-sizing requirements.

- ●Ultra compact and thin. (2.0 × 1.6 × 0.45 mm)
- ●Excellent environmental characteristics, including heat and shock resistance.
- ●Excellent electrical performance, ideal for OA (office automation), AV(audiovisual), Bluetooth and Wireless LAN applications.
- ●Lead-free. Meets the requirements for re-flow profiling using lead-free solder.

Pb Free

RoHS Compliant
Directive 2011/65/EU
Directive (EU) 2015/863

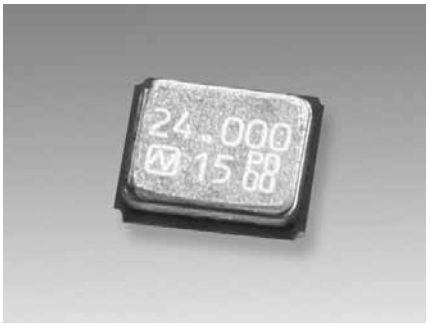

■ Specifications

Item / Model	NX2016SA		
Standard	Standard		Optional
Nominal Frequency (MHz)	16 ≤ F ≤ 80		16 ≤ F ≤ 80
Overtone Order	Fundamental		Fundamental
Frequency Tolerance (25 ±3 °C)	±10 × 10^{-6}		±10 × 10^{-6}
Frequency versus Temperature Characteristics (with reference to +25 °C)	±25 × 10^{-6}	±15 × 10^{-6}	±25 × 10^{-6} (Temp extended case, *1)
Operating Temperature Range (°C)	−40 to +85	−10 to +75	−40 to +85 *1
Storage Temperature Range (°C)	−40 to +85		−40 to +85
Equivalent Series Resistance	Refer to *2		Refer to *2
Level of Drive (μW)	10 (Max. 100)		10 (Max. 100)
Load Capacitance (pF)	8		6 to 18
Frequency Aging (+25°C)			Max. ±3 × 10^{-6} / year *1
Specifications Number	STD-CZS-7	STD-CZS-6	Refer to *3

Please specify the model name,frequency,and specification number when you order products.
For futher questions regarding specifications, please feel free to contact us.
*1 If you have any other requests, NDK will study it.
*3 Ordering information: Overtone Order Fundamental / 3rd Overtone, the Operating Temperature Range, Frequency versus Temperature Characteristics, Frequency Tolerance, and Load Capacitance.
Ex. Model, Frequency (38.400000MHz 6digits), S1:Fundamental or S3:3rd Overtone
- Operating Temperature Range (-40 to +85°C) - Frequency versus Temperature Characteristics (±25×10^{-6})
- Frequency Tolerance (±12×10^{-6}) - Load Capacitance (7pF)

NX2016SA
38.400000MHz
S1-4085-25-12-7

■ Dimensions

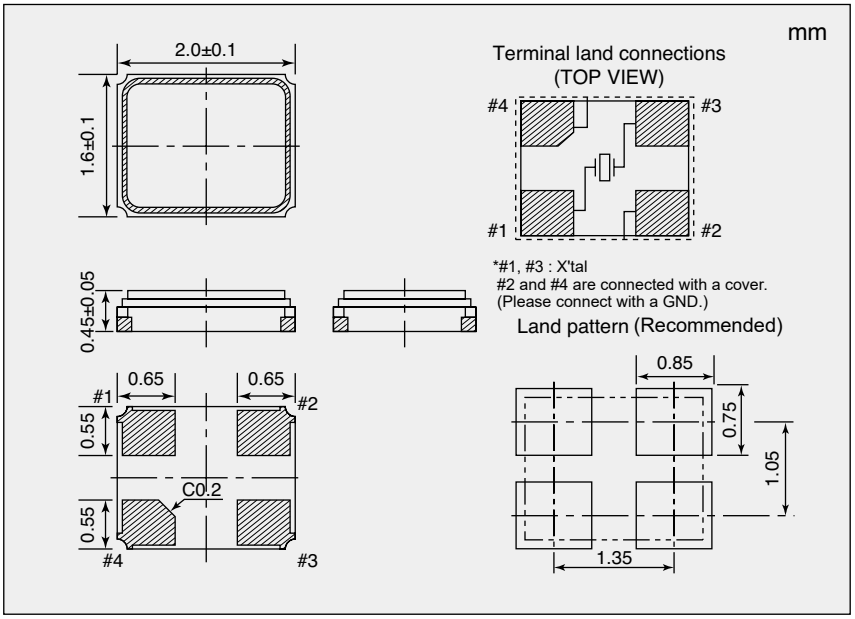

*2 Equivalent Series Resistance

Nominal Frequency (MHz)	Equivalent Series Resistance Max. (Ω)
16 ≤ F < 18	200
18 ≤ F < 20	150
20 ≤ F < 24	100
24 ≤ F < 26	80
26 ≤ F < 40	60
40 ≤ F ≤ 80	50

If you have any other requests,NDK will study it.

NX2016GC

For Automotive

■ Features

High reliability small surface-mount type crystal unit for automotive.

- ●High resistance to solder cracking.
- ●Ultra compact and thin. (2.0 x 1.6 x 0.7mm)
- ●Stable start-up characteristics even under extremely severe environmental conditions.
- ●Excellent environment-resistant performance, including heat, vibration and shock resistance.
- ●Meets the requirements for re-flow profiling using lead-free solder.
- ●Conforms to AEC-Q200.

RoHS Compliant
Directive 2011/65/EU
Directive (EU) 2015/863

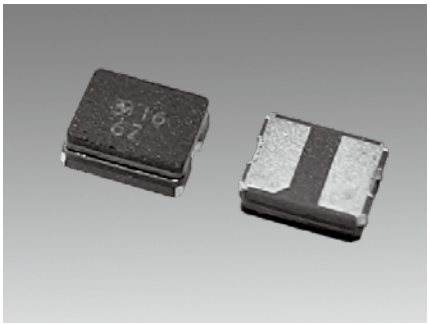

■ Specifications

Item / Model	NX2016GC	
Standard	Standard	Optional
Nominal Frequency (MHz)	16 ≤ F ≤ 50	16 ≤ F ≤ 50
Overtone Order	Fundamental	Fundamental
Frequency Tolerance (25 ±3 °C)	±50 × 10^{-6}	±50 × 10^{-6}
Frequency versus Temperature Characteristics (with reference to +25 °C)	±150 × 10^{-6}	±150 × 10^{-6}
Operating Temperature Range (°C)	−40 to +150	−40 to +150
Storage Temperature Range (°C)	−40 to +150	−40 to +150
Equivalent Series Resistance	Refer to *1	Refer to *1
Level of Drive (μW)	10 (Max. 200)	10 (Max. 200)
Load Capacitance (pF)	8	6 to 18
Frequency Aging (+25°C)	---	Max. ±10 × 10^{-6} / year *2
Specifications Number	STD−CZA-1	Refer to *3

Please specify the model name,frequency,and specification number when you order products.
For futher questions regarding specifications, please feel free to contact us.
*2 If you have any other requests, NDK will study it.
*3 Ordering information: Overtone Order Fundamental / 3rd Overtone, the Operating Temperature Range, Frequency versus Temperature Characteristics, Frequency Tolerance, and Load Capacitance.
Ex. Model, Frequency (38.400000MHz 6digits), S1:Fundamental or S3:3rd Overtone
- Operating Temperature Range (-40 to +150°C) - Frequency versus Temperature Characteristics (±150×10^{-6})
- Frequency Tolerance (±50×10^{-6}) - Load Capacitance (7pF)

NX2016GC
38.400000MHz
S1-40150-150-50-7

■ Dimensions

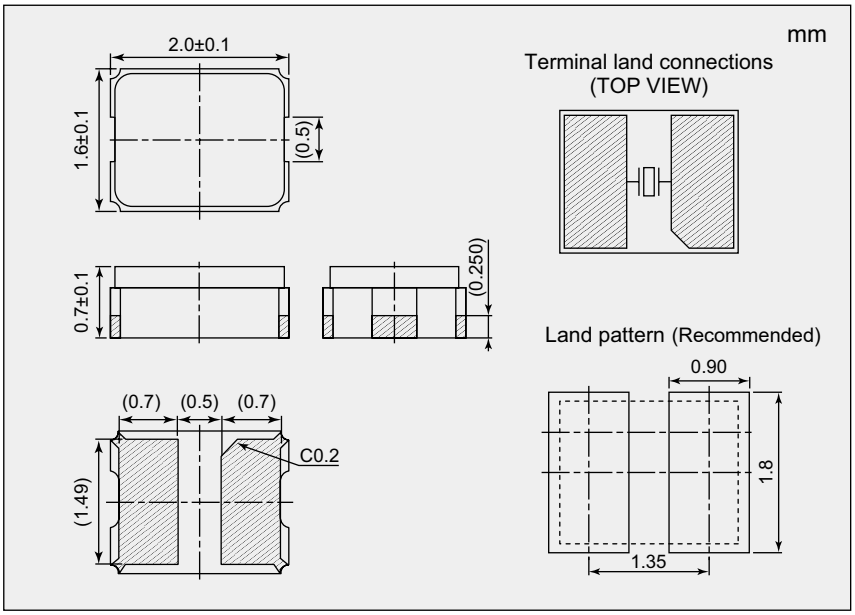

*1 Equivalent Series Resistance

Nominal Frequency (MHz)	Equivalent Series Resistance Max. (Ω)
16 ≤ F < 20	300
20 ≤ F < 22	220
22 ≤ F < 26	180
26 ≤ F ≤ 50	120

If you have any other requests,NDK will study it.

NX2016SA

For Automotive

■ Features

A small and thin surface-mount type crystal unit for automotive.

- Ultra compact and thin. (2.0 × 1.6 × 0.45 mm)
- Stable start-up characteristics even under extremely severe environmental conditions.
- Excellent environmental characteristics, including heat, vibration and shock resistance.
- Lead-free. Meets the requirements for re-flow profiling using lead-free solder.
- Conforms to AEC-Q200.

Pb Free

RoHS Compliant
Directive 2011/65/EU
Directive (EU) 2015/863

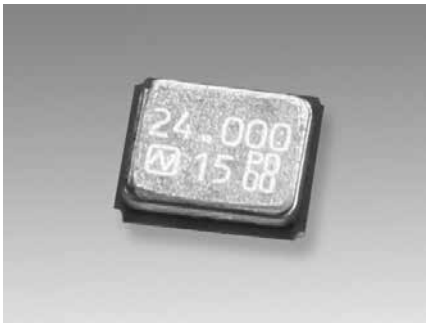

■ Specifications

Item \ Model	NX2016SA	
Standard	Standard	Optional
Nominal Frequency (MHz)	16 ≤ F ≤ 80	16 ≤ F ≤ 80
Overtone Order	Fundamental	Fundamental
Frequency Tolerance (25 ±3 °C)	±15 × 10^{-6}	±15 × 10^{-6}
Frequency versus Temperature Characteristics (with reference to +25 °C)	±50 × 10^{-6}	±50 × 10^{-6}
Operating Temperature Range (°C)	−40 to +125	−40 to +125
Storage Temperature Range (°C)	−40 to +125	−40 to +125
Equivalent Series Resistance	Refer to *1	Refer to *1
Level of Drive (μW)	10 (Max. 200)	10 (Max. 200)
Load Capacitance (pF)	8	6 to 18
Frequency Aging (+25°C)	---	Max. ±3 × 10^{-6} / year *2
Specifications Number	STD-CZS-3	Refer to *3

Please specify the model name,frequency,and specification number when you order products.
For futher questions regarding specifications, please feel free to contact us.
*2 If you have any other requests, NDK will study it.
*3 Ordering information: Overtone Order Fundamental / 3rd Overtone, the Operating Temperature Range, Frequency versus Temperature Characteristics, Frequency Tolerance, and Load Capacitance.
Ex. Model, Frequency (38.400000MHz 6digits), S1:Fundamental or S3:3rd Overtone
- Operating Temperature Range (-40 to +125°C) - Frequency versus Temperature Characteristics (±50×10^{-6})
- Frequency Tolerance (±15×10^{-6}) - Load Capacitance (7pF)

NX2016SA
38.400000MHz
S1-40125-50-15-7

■ Dimensions

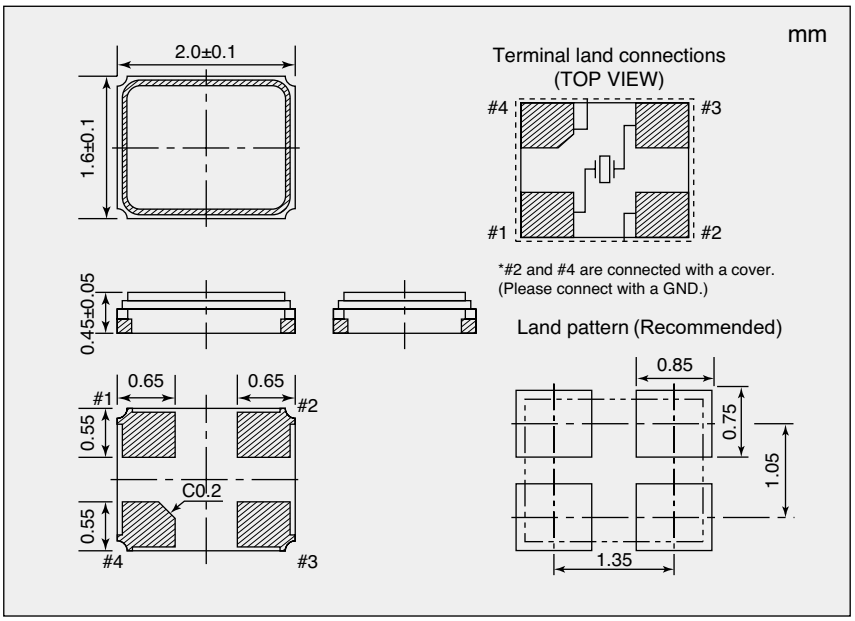

*1 Equivalent Series Resistance

Nominal Frequency (MHz)	Equivalent Series Resistance Max. (Ω)
16 ≤ F < 20	200
20 ≤ F < 24	100
24 ≤ F < 26	80
26 ≤ F < 40	60
40 ≤ F ≤ 80	50

If you have any other requests,NDK will study it.

Crystal Units

NX2520SA For OA / AV Mobile Communications/ Short-range Wireless

■ Features

Ideal for such as Bluetooth, Wi-Fi, smartphone and tablet pc.

- ●Compact and thin. (2.5 × 2.0 × 0.50 mm typ.)
- ●Excellent environmental characteristics, including heat and shock resistance.
- ●Lead-free. Meets the requirements for re-flow profiling using lead-free solder.

Pb Free

RoHS Compliant
Directive 2011/65/EU
Directive (EU) 2015/863

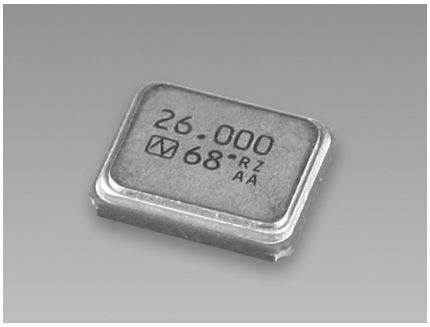

■ Specifications

Item \ Model	NX2520SA		
Standard	Standard		Optional
Nominal Frequency (MHz)	16 ≤ F ≤ 80	16 ≤ F ≤ 54	16 ≤ F ≤ 80
Overtone Order	Fundamental		
Frequency Tolerance (25 ±3 °C)	±15 × 10^{-6}	±10 × 10^{-6}	±8×10^{-6} (16 ≤ F ≤ 40MHz) ±12×10^{-6} (40 < F ≤ 80MHz)
Frequency versus Temperature Characteristics (with reference to +25 °C)	±25 × 10^{-6}	±10 × 10^{-6}	±10 × 10^{-6} (Temp extended case, *1)
Operating Temperature Range(°C)	−40 to +85	–20 to +75	–20 to +75 (–40 to +85 °C Extended)
Storage Temperature Range (°C)	−40 to +85		−40 to +125
Equivalent Series Resistance	Refer to *2	Refer to *3	Refer to *2
Level of Drive (μW)	10 (Max. 100)		10 (Max. 200) *1
Load Capacitance (pF)	8		6 to 32
Frequency Aging (+25 °C)	---		Max. ±3×10^{-6} / year *1
Specifications Number	STD-CSW-6	STD-CSX-1	Refer to *4

Please specify the model name, frequency, and specification number when you order products.
For further questions regarding specifications, please feel free to contact us.
*1 If you have any other requests, NDK will study it.
*4 Ordering information: Overtone Order Fundamental / 3rd Overtone, the Operating Temperature Range, Frequency versus Temperature Characteristics, Frequency Tolerance, and Load Capacitance.
Ex. Model, Frequency (24.000000MHz 6digits), S1: Fundamental or S3 : 3rd overtone
– Operating Temperature Range (−40 to +85°C) − Frequency versus Temperature Characteristics (±25 × 10^{-6})
− Frequency Tolerance (±10 × 10^{-6}) − Load Capacitance (8pF)
NX2520SA
24.000000MHz
S1-4085-25-10-8

■ Dimensions

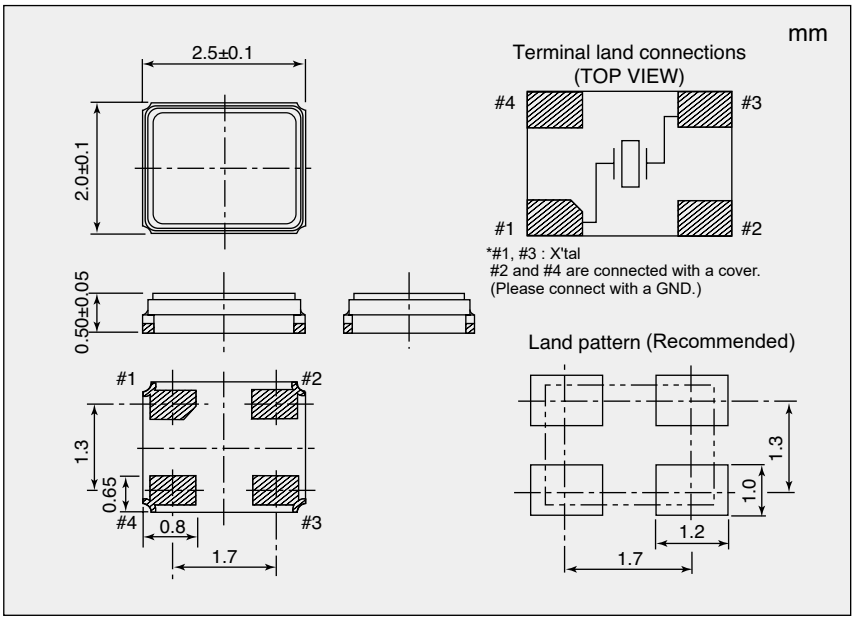

*2 Equivalent Series Resistance

Nominal Frequency (MHz)	Equivalent Series Resistance Max. (Ω)
16 ≤ F < 20	80
20 ≤ F < 30	60
30 ≤ F < 35	50
35 ≤ F ≤ 80	40

If you have any other requests, NDK will study it.

*3 Equivalent Series Resistance

Nominal Frequency (MHz)	Equivalent Series Resistance Max. (Ω)
16 ≤ F < 20	80
20 ≤ F < 30	60
30 ≤ F < 35	50
35 ≤ F ≤ 54	40

If you have any other requests, NDK will study it.

NX3225SA For OA / AV Mobile Communications/ Short-range Wireless

■ Features

Ideal for such as bluetooth, Wifi, smartphone and tablet pc.

- ●Compact and thin. (3.2 × 2.5 × 0.55 mm typ.)
- ●Excellent environmental characteristics, including heat and shock resistance.
- ●Lead-free. Meets the requirements for re-flow profiling using lead-free solder.

Pb Free

RoHS Compliant
Directive 2011/65/EU
Directive (EU) 2015/863

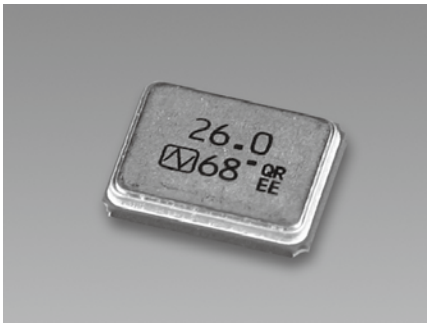

■ Specifications

Item / Model	NX3225SA	
Standard	Standard	Optional
Nominal Frequency (MHz)	12 ≤ F ≤ 64	12 ≤ F ≤ 64
Overtone Order	Fundamental	Fundamental
Frequency Tolerance (25 ±3 °C)	±15 × 10^{-6}	±10 × 10^{-6}
Frequency versus Temperature Characteristics (with reference to +25 °C)	±25 × 10^{-6}	±25 × 10^{-6} (Temp extended case, *1)
Operating Temperature Range (°C)	−40 to +85	−40 to +85 *1
Storage Temperature Range	−40 to +85	−40 to +85
Equivalent Series Resistance	Refer to *2	Refer to *1
Level of Drive (μW)	10 (Max. 200)	10 (Max. 200)
Load Capacitance (pF)	8	6 to 32
Frequency Aging (+25°C)	---	Max. ±3 × 10^{-6} / year *1
Specifications Number	STD-CQR-1	Refer to *3

Please specify the model name, frequency, and specification number when you order products.
For further questions regarding specifications, please feel free to contact us.
*1 If you have any other requests, NDK will study it.
*3 Ordering information: Overtone Order Fundamental / 3rd Overtone, the Operating Temperature Range, Frequency versus Temperature Characteristics, Frequency Tolerance, and Load Capacitance.
Ex. Model, Frequency (24.000000MHz 6digits), S1: Fundamental or S3 : 3rd overtone
– Operating Temperature Range (−40 to +85°C) − Frequency versus Temperature Characteristics (±25 × 10^{-6})
− Frequency Tolerance (±10 × 10^{-6}) − Load Capacitance (8pF)
NX3225SA
24.000000MHz
S1-4085-25-10-8

■ Dimensions

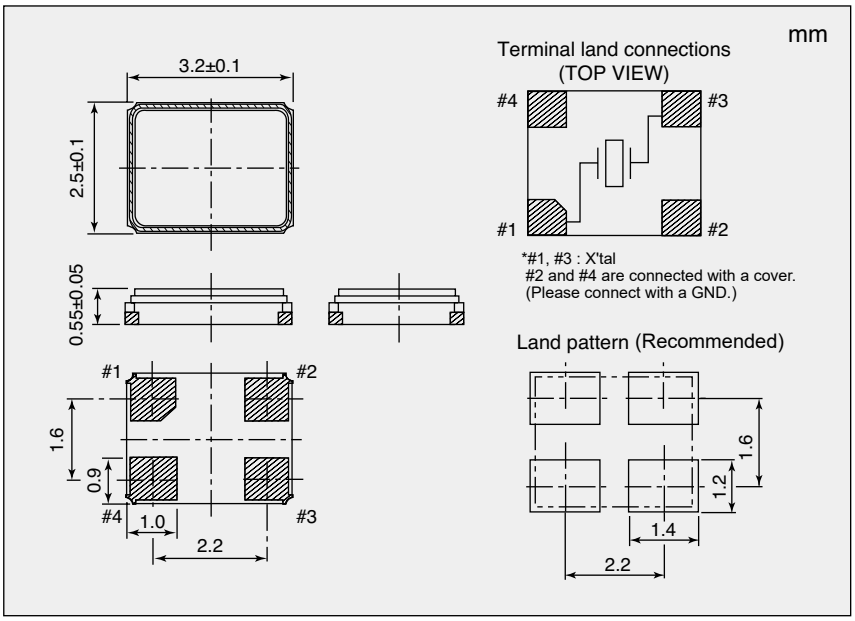

Equivalent Series Resistance

	Overtone Order	Nominal Frequency (MHz)	Equivalent Series Resistance Max. (Ω)
*2	Fundamental	12 ≤ F < 13	100
		13 ≤ F < 20	80
		20 ≤ F ≤ 64	50

If you have any other requests,NDK will study it.

NX3225GA

For OA / AV

■ Features

A small surface-mount type crystal unit, especially suited for small-sizing requirements.

- ●Compact and thin. (3.2 x 2.5 x 0.75 mm typ.)
- ●Excellent environmental characteristics, including heat and shock resistance.
- ●Excellent electrical performance for OA (office automation) and AV (audiovisual) applications.
- ●Meets the requirements for re-flow profiling using lead-free solder.

RoHS Compliant
Directive 2011/65/EU
Directive (EU) 2015/863

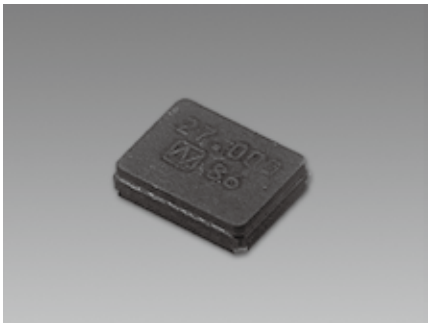

■ Specifications

Item / Model	NX3225GA	
Standard	Standard	Optional
Nominal Frequency (MHz)	9.840 ≤ F ≤ 50	9.840 ≤ F ≤ 50
Overtone Order	Fundamental	Fundamental
Frequency Tolerance (25 ±3 °C)	±20 × 10^{-6}	±20 × 10^{-6}
Frequency versus Temperature Characteristics (with reference to +25 °C)	±30 × 10^{-6}	±30 × 10^{-6} (Temp extended case, *1)
Operating Temperature Range (°C)	−40 to +85	−40 to +85 *1
Storage Temperature Range (°C)	−40 to +85	−40 to +85
Equivalent Series Resistance	Refer to *2	Refer to *2
Level of Drive (μW)	10 (Max. 200)	10 (Max. 200)
Load Capacitance (pF)	8	6 to 32
Frequency Aging (+25 °C)	---	Max. ±10 × 10^{-6} / year *1
Specifications Number	STD-CRG-2	Refer to *3

Please specify the model name,frequency,and specification number when you order products.
For futher questions regarding specifications, please feel free to contact us.
*1 If you have any other requests, NDK will study it.
*3 Ordering information: Overtone Order Fundamental / 3rd Overtone, the Operating Temperature Range, Frequency versus Temperature Characteristics, Frequency Tolerance, and Load Capacitance.
Ex. Model, Frequency (38.400000MHz 6digits), S1:Fundamental or S3:3rd Overtone
- Operating Temperature Range (-40 to +85°C) - Frequency versus Temperature Characteristics (±30×10^{-6})
- Frequency Tolerance (±20×10^{-6}) - Load Capacitance (8pF)

NX3225GA
38.400000MHz
S1-4085-30-20-8

■ Dimensions

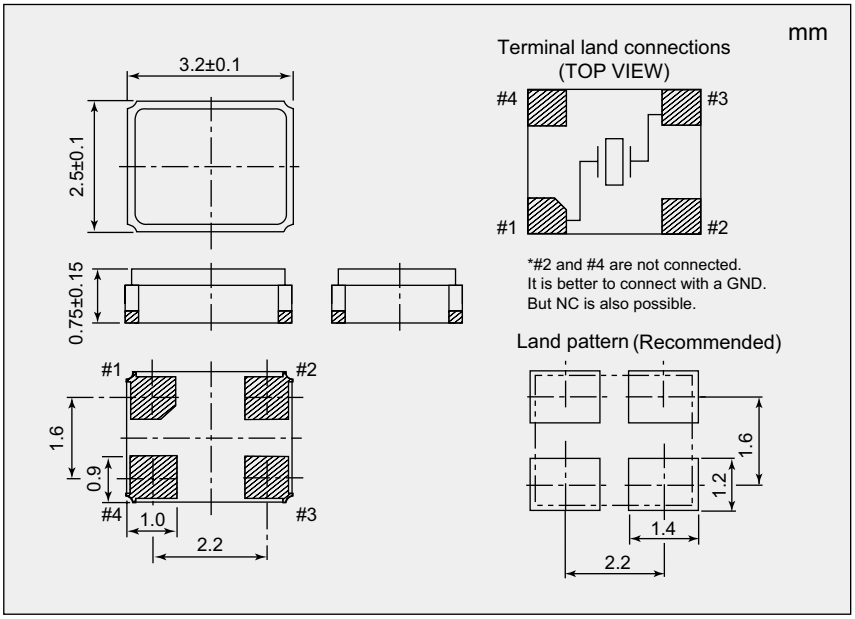

*2 Equivalent Series Resistance

Nominal Frequency (MHz)	Equivalent Series Resistance Max. (Ω)
9.840 ≤ F < 12	200
12 ≤ F < 13	100
13 ≤ F < 20	80
20 ≤ F ≤ 50	50

If you have any other requests,NDK will study it.

NX3225GA

For Automotive

■ Features

A surface-mount compact crystal unit suitable for automotive.

- ●Compact and thin. (3.2 x 2.5 x 0.75 mm typ.)
- ●Stable start-up characteristics even under extremely severe environmental conditions.
- ●Excellent environment-resistant performance, including heat, vibration and shock resistance.
- ●Meets the requirements for re-flow profiling using lead-free solder.
- ●Conforms to AEC-Q200.

RoHS Compliant
Directive 2011/65/EU
Directive (EU) 2015/863

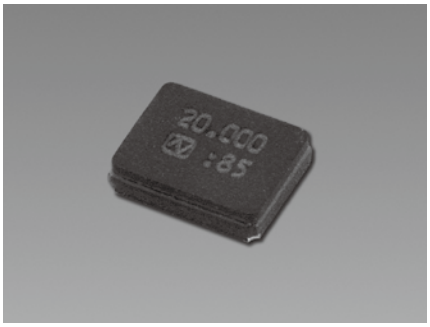

■ Specifications

Item / Model	NX3225GA	
Standard	Standard	Optional
Nominal Frequency (MHz)	9.8 ≤ F ≤ 50	9.8 ≤ F ≤ 50
Overtone Order	Fundamental	Fundamental
Frequency Tolerance (25 ±3 °C)	±50 × 10^{-6}	±50 × 10^{-6}
Frequency versus Temperature Characteristics (with reference to +25 °C)	±150 × 10^{-6}	±150 × 10^{-6}
Operating Temperature Range (°C)	−40 to +150	−40 to +150
Storage Temperature Range (°C)	−40 to +150	−40 to +150
Equivalent Series Resistance	Refer to *1	Refer to *1
Level of Drive (μW)	10 (Max. 200)	10 (Max. 200)
Load Capacitance (pF)	8	6 to 32
Frequency Aging (+25°C)	---	Max. ±10 × 10^{-6} / year *2
Specifications Number	STD-CRA-1	Refer to *3

Please specify the model name,frequency,and specification number when you order products.
For futher questions regarding specifications, please feel free to contact us.
*2 If you have any other requests, NDK will study it.
*3 Ordering information: Overtone Order Fundamental / 3rd Overtone, the Operating Temperature Range, Frequency versus Temperature Characteristics, Frequency Tolerance, and Load Capacitance.
Ex. Model, Frequency (38.400000MHz 6digits), S1:Fundamental or S3:3rd Overtone
- Operating Temperature Range (-40 to +150°C) - Frequency versus Temperature Characteristics (±150×10^{-6})
- Frequency Tolerance (±50×10^{-6}) - Load Capacitance (8pF)

NX3225GA
38.400000MHz
S-40150-150-50-8

■ Dimensions

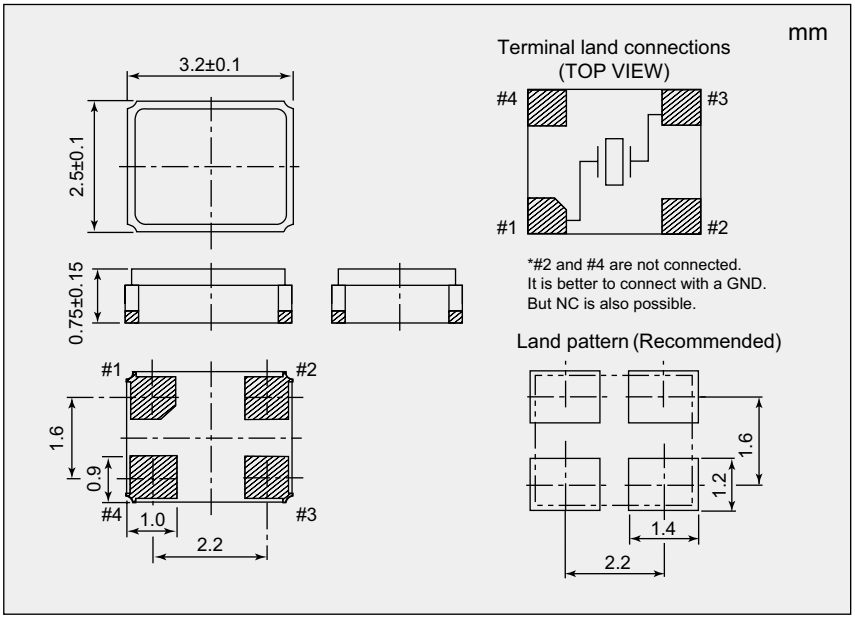

*1 Equivalent Series Resistance

Nominal Frequency (MHz)	Equivalent Series Resistance Max. (Ω)
9.8 ≤ F < 12	300
12 ≤ F < 20	120
20 ≤ F ≤ 50	100

If you have any other requests,NDK will study it.

NX3225GB

For Automotive

■ Features

A small surface-mount type crystal unit, ideal for an engine control CPU clock; delivering the high reliability that is particularly demanded by automotive.

- ●Compact and thin. (3.2 x 2.5 x 0.75 mm typ.)
- ●High resistance to solder cracking.
- ●Stable start-up characteristics even under extremely severe environmental conditions.
- ●Excellent environment-resistant performance, including heat, vibration and shock resistance.
- ●Meets the requirements for re-flow profiling using lead-free solder.
- ●Conforms to AEC-Q200.

RoHS Compliant
Directive 2011/65/EU
Directive (EU) 2015/863

■ Specifications

Item / Model	NX3225GB	
Standard	Standard	Optional
Nominal Frequency (MHz)	12 ≤ F ≤ 50	12 ≤ F ≤ 50
Overtone Order	Fundamental	Fundamental
Frequency Tolerance (25 ±3 °C)	±50 × 10^{-6}	±50 × 10^{-6}
Frequency versus Temperature Characteristics (with reference to +25 °C)	±150 × 10^{-6}	±150 × 10^{-6}
Operating Temperature Range (°C)	−40 to +150	−40 to +150
Storage Temperature Range (°C)	−40 to +150	−40 to +150
Equivalent Series Resistance	Refer to *1	Refer to *1
Level of Drive (μW)	10 (Max. 200)	10 (Max. 200)
Load Capacitance (pF)	8	6 to 32
Frequency Aging (+25 °C)	---	Max. ±10 × 10^{-6} / year *2
Specifications Number	STD-CRA-2	Refer to *3

*If you required 7.98 to 12MHz, please refer to NX3225GD.

Please specify the model name,frequency,and specification number when you order products.
For futher questions regarding specifications, please feel free to contact us.
*2 If you have any other requests, NDK will study it.
*3 Ordering information: Overtone Order Fundamental / 3rd Overtone, the Operating Temperature Range, Frequency versus Temperature Characteristics, Frequency Tolerance, and Load Capacitance.
Ex. Model, Frequency(38.400000MHz 6digits), S1:Fundamental or S3:3rd Overtone
- Operating Temperature Range (-40 to +150°C) - Frequency versus Temperature Characteristics (±150×10^{-6})
- Frequency Tolerance (±50×10^{-6}) - Load Capacitance (8pF)

NX3225GB
38.400000MHz
S1-40150-150-50-8

■ Dimensions

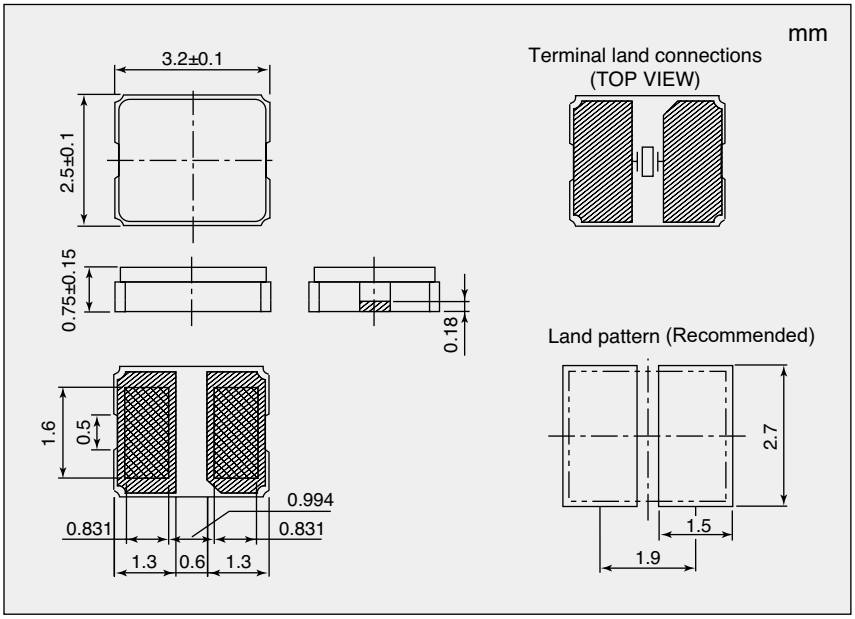

*1 Equivalent Series Resistance

Nominal Frequency (MHz)	Equivalent Series Resistance Max. (Ω)
12 ≤ F < 20	120
20 ≤ F ≤ 50	100

If you have any other requests,NDK will study it.

NX3225GD

For Automotive

■ Features

A small surface-mount type crystal unit, ideal for an engine control CPU clock; delivering the high reliability that is particularly demanded by automotive.
Compatible with low frequency range starting from 7.98 MHz.

- ●Compact and thin. (3.2 x 2.5 x 0.8mm)
- ●High resistance to solder cracking.
- ●Stable start-up characteristics even under extremely severe environmental conditions.
- ●Excellent environment-resistant performance, including heat, vibration and shock resistance.
- ●Meets the requirements for re-flow profiling using lead-free solder.
- ●Conforms to AEC-Q200.

RoHS Compliant
Directive 2011/65/EU
Directive (EU) 2015/863

■ Specifications

Item / Model	NX3225GD	
Standard	Standard	Optional
Nominal Frequency (MHz)	7.98 ≤ F ≤ 12	7.98 ≤ F ≤ 12
Overtone Order	Fundamental	Fundamental
Frequency Tolerance (25 ±3 °C)	$\pm 50 \times 10^{-6}$	$\pm 50 \times 10^{-6}$
Frequency versus Temperature Characteristics (with reference to +25 °C)	$\pm 150 \times 10^{-6}$	$\pm 150 \times 10^{-6}$
Operating Temperature Range (°C)	−40 to +150	−40 to +150
Storage Temperature Range (°C)	−40 to +150	−40 to +150
Equivalent Series Resistance	Refer to *1	Refer to *1
Level of Drive (μW)	10 (Max. 200)	10 (Max. 200)
Load Capacitance (pF)	8	6 to 32
Frequency Aging (+25 °C)	---	Max. $\pm 10 \times 10^{-6}$ / year *2
Specifications Number	STD-CRA-3	Refer to *3

Please specify the model name,frequency,and specification number when you order products.
For futher questions regarding specifications, please feel free to contact us.
*2 If you have any other requests, NDK will study it.
*3 Ordering information: Overtone Order Fundamental / 3rd Overtone, the Operating Temperature Range, Frequency versus Temperature Characteristics, Frequency Tolerance, and Load Capacitance.
Ex. Model, Frequency(10.000000MHz 6digits), S1:Fundamental or S3:3rd Overtone
- Operating Temperature Range (-40 to +150°C) - Frequency versus Temperature Characteristics ($\pm 150 \times 10^{-6}$)
- Frequency Tolerance ($\pm 50 \times 10^{-6}$) - Load Capacitance (8pF)

NX3225GD
10.000000MHz
S1-40150-150-50-8

■ Dimensions

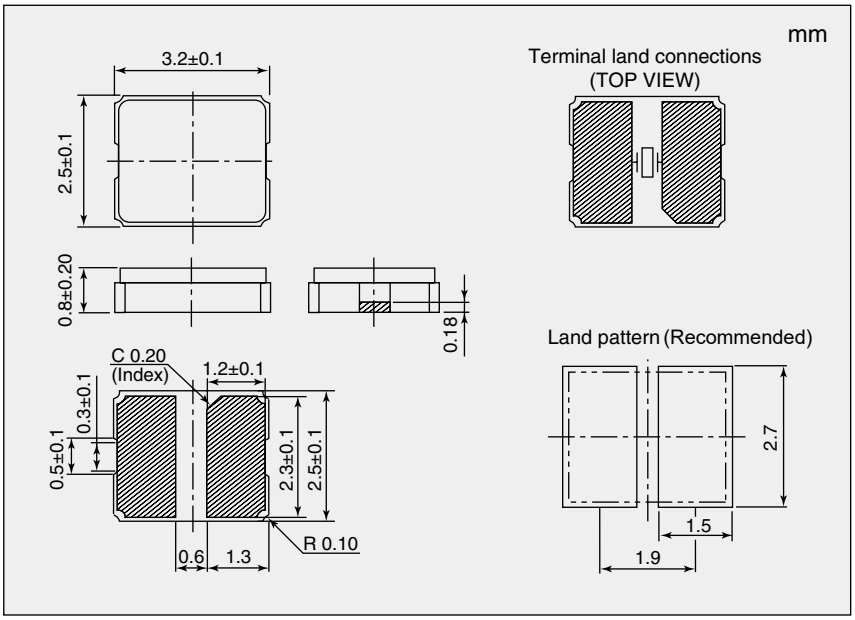

*1 Equivalent Series Resistance

Nominal Frequency (MHz)	Equivalent Series Resistance Max. (Ω)
7.98 ≤ F < 9.8	500
9.8 ≤ F ≤ 12	300

If you have any other requests,NDK will study it.

NX3225SA

For Automotive

■ Features

A small surface-mount type crystal unit, ideal for automotive applications.

- ●With a well established reputation for reliability, this product is best suited for automotive equipment.
- ●Stable start-up characteristic even under extremely severe environmental conditions.
- ●Excellent environmental characteristics, including heat, vibration and shock resistance.
- ●Lead-free. Meets the requirements for re-flow profiling using lead-free solder.
- ●Conforms to AEC-Q200.

Pb Free

RoHS Compliant
Directive 2011/65/EU
Directive (EU) 2015/863

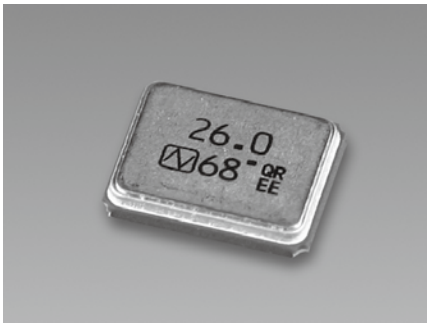

■ Specifications

Item \ Model	NX3225SA	
Standard	Standard	Optional
Nominal Frequency (MHz)	12 ≤ F ≤ 50	12 ≤ F ≤ 50
Overtone Order	Fundamental	Fundamental
Frequency Tolerance (25 ±3 °C)	±15 × 10^{-6}	±15 × 10^{-6}
Frequency versus Temperature Characteristics (with reference to +25 °C)	±50 × 10^{-6}	±50 × 10^{-6}
Operating Temperature Range (°C)	−40 to +125	−40 to +125
Storage Temperature Range (°C)	−40 to +125	−40 to +125
Equivalent Series Resistance	Refer to *1	Refer to *1
Level of Drive (μW)	10 (Max. 200)	10 (Max. 200)
Load Capacitance (pF)	8	6 to 32
Frequency Aging (+25 °C)	---	Max. ±3 × 10^{-6} / year *2
Specifications Number	STD-CQS-1	Refer to *3

Please specify the model name,frequency,and specification number when you order products.
For futher questions regarding specifications, please feel free to contact us.
*2 If you have any other requests, NDK will study it.
*3 Ordering information: Overtone Order Fundamental / 3rd Overtone, the Operating Temperature Range, Frequency versus Temperature Characteristics, Frequency Tolerance, and Load Capacitance.
Ex. Model, Frequency (38.400000MHz 6digits), S1:Fundamental or S3:3rd Overtone
- Operating Temperature Range (-40 to +125°C) - Frequency versus Temperature Characteristics (±50×10^{-6})
- Frequency Tolerance (±15×10^{-6}) - Load Capacitance (8pF)

NX3225SA
38.400000MHz
S1-40125-50-15-8

■ Dimensions

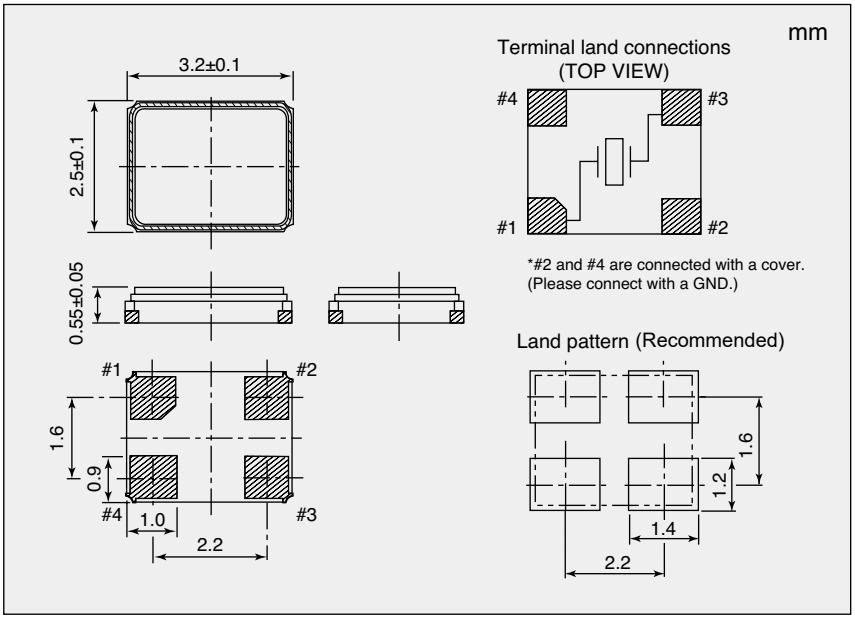

*1 Equivalent Series Resistance

Nominal Frequency (MHz)	Equivalent Series Resistance Max. (Ω)
12 ≤ F < 20	120
20 ≤ F ≤ 50	100

If you have any other requests,NDK will study it.

NX5032GA

For OA / AV

■ Features

Ideal for OA/AV applications and Accessories for a car.

- Compact and thin. (5.0×3.2×1.3mm typ.)
- Supports low frequencies starting from 8 MHz.
- Excellent environmental characteristics, including heat and shock resistance.
- Meets the requirements for re-flow profiling using lead-free solder.

RoHS Compliant
Directive 2011/65/EU
Directive (EU) 2015/863

■ Specifications

Item \ Model	NX5032GA					
Standard	Standard					Optional
Nominal Frequency (MHz)	8 ≤ F < 10.499	10.5≤F≤ 49.999	8 ≤ F ≤ 10.499	10.5≤F≤ 49.999	50 ≤ F ≤ 55	8 ≤ F ≤ 55
Overtone Order	Fundamental					Fundamental
Frequency Tolerance (25 ±3 °C)	±30 × 10^{-6}		±20 × 10^{-6}			±20 × 10^{-6}
Frequency versus Temperature Characteristics (with reference to +25 °C)	±50 × 10^{-6}		±30 × 10^{-6}			±50 × 10^{-6}
Operating Temperature Range (°C)	−40 to +85		−10 to +70			−40 to +85 *3
Storage Temperature Range (°C)	−40 to +125		−40 to +85			−40 to +125
Equivalent Series Resistance	Refer to *1		Refer to *2			Refer to *1 *2
Level of Drive (μW)	50 (Max. 500)					50 (Max. 500)
Load Capacitance (pF)	8					6 to 32
Frequency Aging (+25 °C)	---	---	---	---	---	Max. ±10 × 10^{-6} / year *3
Specifications Number	STD-CSK-7	STD-CSK-8	STD-CSK-3	STD-CSK-4	STD-CKW-3	Refer to *4

Please specify the model name, frequency, and specification number when you order products.
For further questions regarding specifications, please feel free to contact us.
*3 If you have any other requests, NDK will study it.
*4 Ordering information: Overtone Order Fundamental / 3rd Overtone, the Operating Temperature Range, Frequency versus Temperature Characteristics, Frequency Tolerance, and Load Capacitance.
Ex. Model, Frequency (24.000000MHz 6digits), S1: Fundamental or S3 : 3rd overtone
– Operating Temperature Range (−40 to +85°C) − Frequency versus Temperature Characteristics (±50 × 10^{-6})
− Frequency Tolerance (±20 × 10^{-6}) − Load Capacitance (10pF)
NX5032GA
24.000000MHz
S1-4085-50-20-10

■ Dimensions

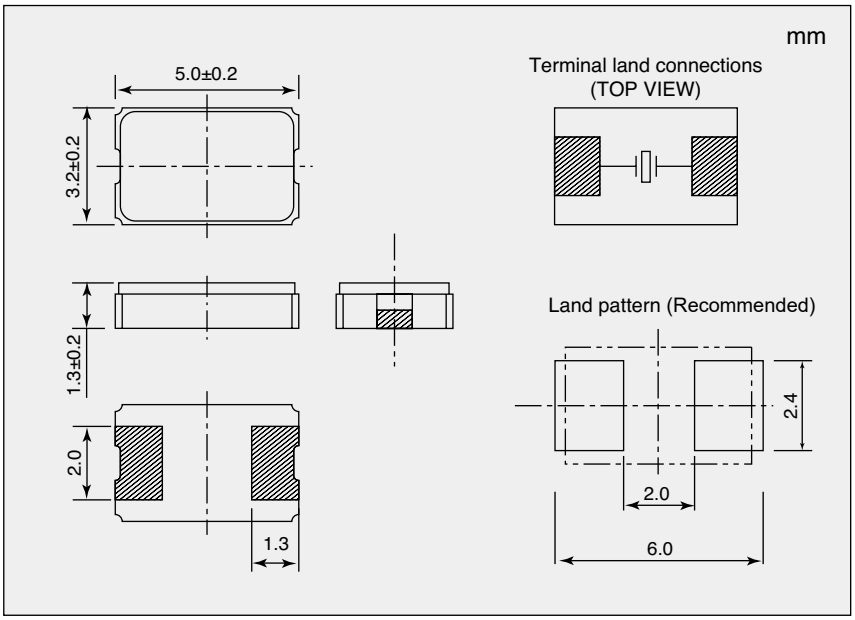

*1 Equivalent Series Resistance

Nominal Frequency (MHz)	Equivalent Series Resistance Max. (Ω)
8 ≤ F < 9.5	300
9.5 ≤ F < 10	150
10 ≤ F < 20	120
20 ≤ F < 30	70
30 ≤ F ≤ 49.99	50

If you have any other requests,NDK will study it.

*2 Equivalent Series Resistance

Nominal Frequency (MHz)	Equivalent Series Resistance Max. (Ω)
8 ≤ F < 9.5	300
9.5 ≤ F < 15	100
15 ≤ F ≤ 55	50

If you have any other requests,NDK will study it.

NX5032GA

For Automotive

■ Features

A small surface-mount type crystal unit, ideal for Automotive.
Compatible with an engine control CPU clock delivering the high reliability that is particularly demanded, and compatible with low frequencies starting from 8 MHz.

- ●Compact and thin. (5.0 × 3.2 × 1.3 mm typ.)
- ●Stable start-up characteristic even under extremely severe environmental conditions.
- ●Excellent environmental characteristics, including heat, vibration and shock resistance.
- ●Meets the requirements for re-flow profiling using lead-free solder.
- ●Conforms to AEC-Q200.

RoHS Compliant
Directive 2011/65/EU
Directive (EU) 2015/863

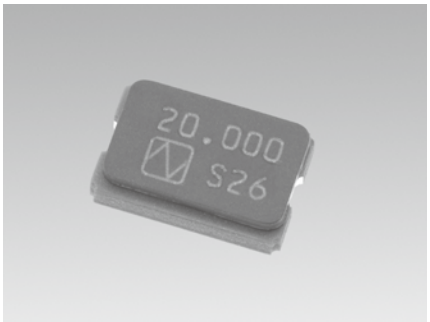

■ Specifications

Item / Model	NX5032GA		
Standard	Standard		Optional
Nominal Frequency (MHz)	8 ≤ F < 10.5	10.5 ≤ F ≤ 40	8 ≤ F ≤ 40
Overtone Order	Fundamental		Fundamental
Frequency Tolerance (25 ±3 °C)	±50 × 10^{-6}		±50 × 10^{-6}
Frequency versus Temperature Characteristics (with reference to +25 °C)	±150 × 10^{-6}		±150 × 10^{-6}
Operating Temperature Range (°C)	−40 to +150		−40 to +150
Storage Temperature Range (°C)	−40 to +150		−40 to +150
Equivalent Series Resistance	Refer to *1		Refer to *1
Level of Drive (μW)	10 (Max. 500)		10 (Max. 500)
Load Capacitance (pF)	8		6 to 32
Frequency Aging (+25 °C)	---		Max. ±10 × 10^{-6} / year *2
Specifications Number	STD-CSU-1	STD-CSU-2	Refer to *3

Please specify the model name, frequency, and specification number when you order products.
For further questions regarding specifications, please feel free to contact us.
*2 If you have any other requests, NDK will study it.
*3 Ordering information: Overtone Order Fundamental / 3rd Overtone, the Operating Temperature Range, Frequency versus Temperature Characteristics, Frequency Tolerance, and Load Capacitance.
Ex. Model, Frequency (24.000000MHz 6digits), S1: Fundamental or S3 : 3rd overtone
– Operating Temperature Range (−40 to +150°C) − Frequency versus Temperature Characteristics (±150 × 10^{-6})
− Frequency Tolerance (±50 × 10^{-6}) − Load Capacitance (10pF)
NX5032GA
24.000000MHz
S1-40150-150-50-10

■ Dimensions

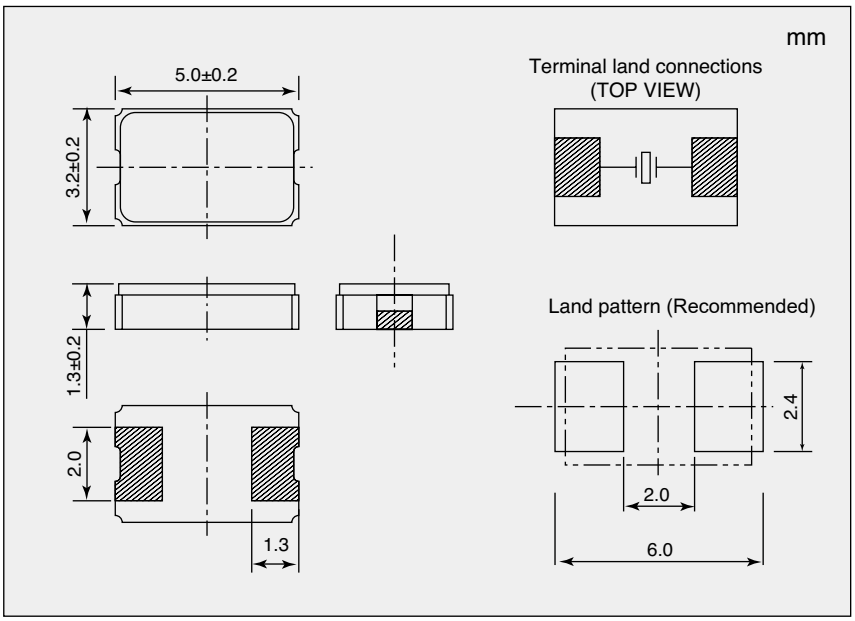

*1 Equivalent Series Resistance

Nominal Frequency (MHz)	Equivalent Series Resistance Max. (Ω)
8 ≤ F < 9.5	300
9.5 ≤ F < 10	220
10 ≤ F < 15	150
15 ≤ F < 20	120
20 ≤ F < 24	100
24 ≤ F < 30	80
30 ≤ F ≤ 40	50

If you have any other requests, NDK will study it.

NX5032SD

For Automotive

■ Features

A small surface-mount type crystal unit, ideal for the special requirements of automotive, such as TPMS (Tire Pressure Monitoring System). The crystal unit is ideally suited for the clock signal generating source of the transmission unit in a tire wheel that is subject to strong centrifugal force.

- ●Stable frequency characteristics even with a powerful centrifugal force of 2,000 G, as found in the transmission side of TPMS applications.
- ●Excellent environmental performance including heat, vibration, shock and heat cycle resistance.
- ●Lead-free. Meets the requirements for re-flow profiling using lead-free solder.
- ●Conforms to AEC-Q200.

Pb Free

RoHS Compliant
Directive 2011/65/EU
Directive (EU) 2015/863

■ Specifications

Item / Model	NX5032SD	
Standard	Standard	Optional
Nominal Frequency (MHz)	9.75 ≤ F ≤ 40	9.75 ≤ F ≤ 40
Overtone Order	Fundamental	Fundamental
Frequency Tolerance (25 ±3 °C)	±15 × 10^{-6}	±15 × 10^{-6}
Frequency versus Temperature Characteristics (with reference to +25 °C)	±50 × 10^{-6}	±50 × 10^{-6}
Operating Temperature Range (°C)	−40 to +125	−40 to +125
Storage Temperature Range (°C)	−40 to +125	−40 to +125
Equivalent Series Resistance	Refer to *1	Refer to *1
Level of Drive (μW)	10 (Max. 100)	10 (Max. 100)
Load Capacitance (pF)	12	6 to 32
Ferquency Aging (+25 °C)	---	Max. ±3 × 10^{-6} / year *2
Specifications Number	STD-CSY-1	Refer to *3

Please specify the model name, frequency, and specification number when you order products.
For further questions regarding specifications, please feel free to contact us.
*2 If you have any other requests, NDK will study it.
*3 Ordering information: Overtone Order Fundamental / 3rd Overtone, the Operating Temperature Range, Frequency versus Temperature Characteristics, Frequency Tolerance, and Load Capacitance.
Ex. Model, Frequency(24.000000MHz 6digits), S1: Fundamental or S3 : 3rd overtone
– Operating Temperature Range(−40 to +125°C) − Frequency versus Temperature Characteristics (±50 × 10^{-6})
− Frequency Tolerance (±15 × 10^{-6}) − Load Capacitance (10pF)
NX5032SD
24.000000MHz
S1-40125-50-15-10

■ Dimensions

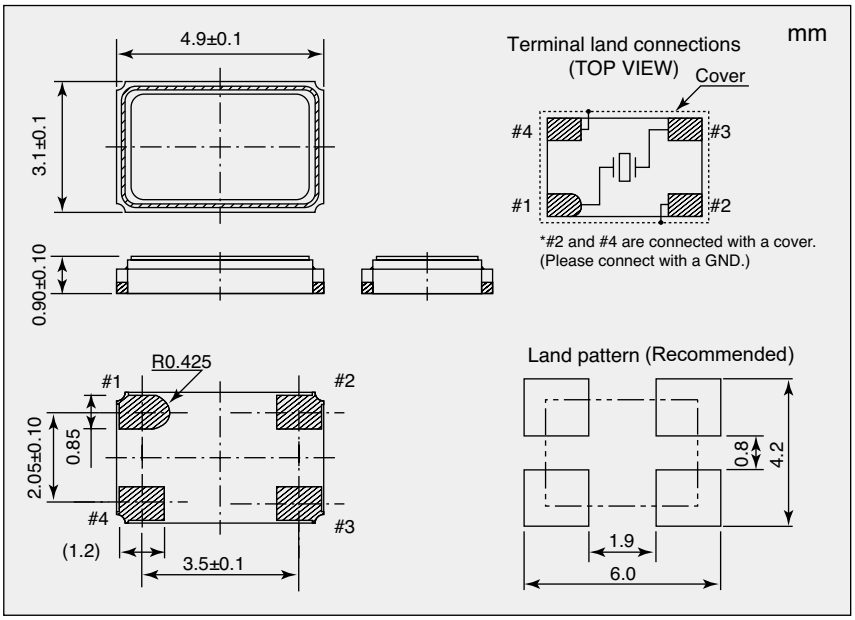

*1 Equivalent Series Resistance

Nominal Frequency (MHz)	Equivalent Series Resistance Max. (Ω)
9.75 ≤ F < 10	150
10 ≤ F < 15	120
15 ≤ F < 20	100
20 ≤ F ≤ 40	80

If you have any other requests, NDK will study it.

NX8045GB

For OA / AV

■ Features

A small surface-mount type crystal unit.

- Compact and thin. (8.0×4.5×1.8mm)
- Supports low frequencies(from 4MHz).
- Ideal for OA/AV applications and Accessories for a car.
- Excellent environmental performance, including heat and shock resistance.
- Meets the requirements for re-flow profiling using lead-free solder.

RoHS Compliant
Directive 2011/65/EU
Directive (EU) 2015/863

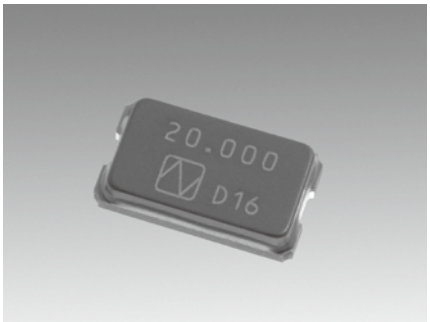

■ Specifications

Item \ Model	NX8045GB						
Standard	Standard						Optional
Nominal Frequency (MHz)	4 ≤ F ≤ 4.9	5 ≤ F ≤ 7.499	7.5 ≤ F ≤ 40	4 ≤ F ≤ 4.9	5 ≤ F ≤ 7.499	7.5 ≤ F ≤ 48	4 ≤ F ≤ 48
Overtone Order	Fundamental						Fundamental
Frequency Tolerance (25 ±3 °C)	$\pm30 \times 10^{-6}$			$\pm20 \times 10^{-6}$			$\pm20 \times 10^{-6}$
Frequency versus Temperature Characteristics (with reference to +25 °C)	$\pm50 \times 10^{-6}$			$\pm30 \times 10^{-6}$			$\pm30 \times 10^{-6}$
Operating Temperature Range (°C)	−40 to +85			−10 to +70			−40 to +85 *2
Storage Temperature Range (°C)	−40 to +125			−40 to +85			−40 to +125 *2
Equivalent Series Resistance	Refer to *1						Refer to *1
Level of Drive (μW)	50 (Max. 500)						50 (Max. 500)
Load Capacitance (pF)	8						6 to 32
Frequency Aging (+25 °C)	---						Max. $\pm10 \times 10^{-6}$ / year *2
Specifications Number	STD-CJL-5	STD-CSF-5	STD-CSF-6	STD-CJL-2	STD-CSF-3	STD-CSF-4	Refer to *3

Please specify the model name, frequency, and specification number when you order products.
For further questions regarding specifications, please feel free to contact us.
*2 If you have any other requests, NDK will study it.
*3 Ordering information: Overtone Order Fundamental / 3rd Overtone, the Operating Temperature Range, Frequency versus Temperature Characteristics, Frequency Tolerance, and Load Capacitance.
Ex. Model, Frequency (24.000000MHz 6digits), S1: Fundamental or S3 : 3rd overtone
– Operating Temperature Range (−40 to +85°C) − Frequency versus Temperature Characteristics ($\pm30 \times 10^{-6}$)
− Frequency Tolerance ($\pm20 \times 10^{-6}$) − Load Capacitance (10pF)
NX8045GB
24.000000MHz
S1-4085-30-20-10

■ Dimensions

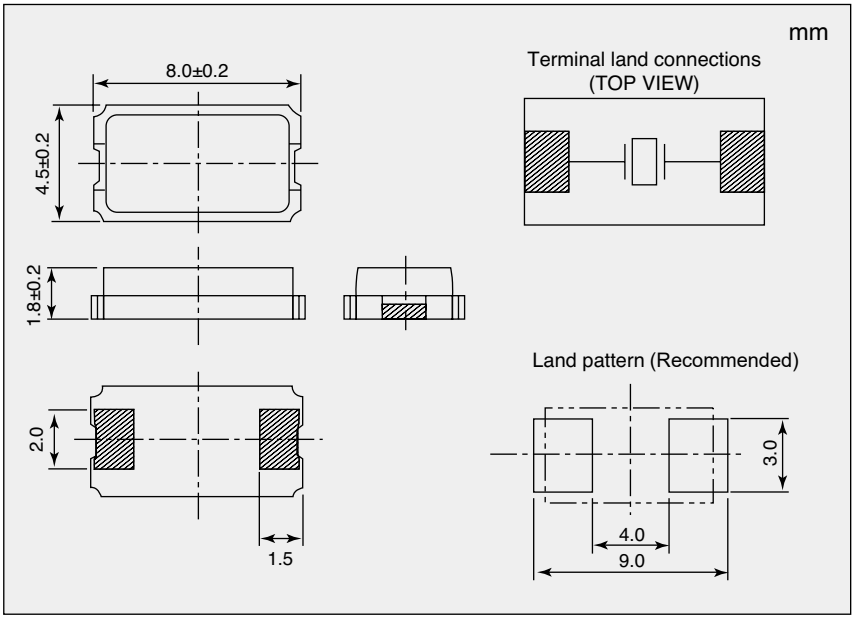

*1 Equivalent Series Resistance

Nominal Frequency (MHz)	Equivalent Series Resistance Max. (Ω)
4 ≤ F < 5	300
5 ≤ F < 8	250
8 ≤ F < 9.5	200
9.5 ≤ F < 10	120
10 ≤ F < 12	100
12 ≤ F < 13	80
13 ≤ F ≤ 40	50

If you have any other requests, NDK will study it.

NX8045GE

For Automotive

■ Features

A small surface-mount type crystal unit, ideal for Automotive.

- Supports low frequencies(from 4MHz to 8MHz).
- Small SMD package. (8.0×4.5×2.0mm)
- Excellent environmental characteristics, including heat, vibration and shock resistance.
- High resistance to solder cracking. Excellent performance for wide temperature range heat cycles (-40 to +150°C, 3,000 cycles) when mounted on a glass epoxy circuit board.
- Support a wide operating temperature range(-40 to +150°C).
- Meets the requirements for re-flow profiling using lead-free solder.
- Conforms to AEC-Q200.

RoHS Compliant
Directive 2011/65/EU
Directive (EU) 2015/863

■ Specifications

Item / Model	NX8045GE	
Standard	Standard	Optional
Nominal Frequency (MHz)	4 ≤ F ≤ 8	4 ≤ F ≤ 8
Overtone Order	Fundamental	Fundamental
Frequency Tolerance (25 ±3 °C)	$\pm 50 \times 10^{-6}$	$\pm 50 \times 10^{-6}$
Frequency versus Temperature Characteristics (with reference to +25 °C)	$\pm 150 \times 10^{-6}$	$\pm 150 \times 10^{-6}$
Operating Temperature Range (°C)	−40 to +150	−40 to +150
Storage Temperature Range (°C)	−40 to +150	−40 to +150
Equivalent Series Resistance (Ω)	Max. 150	Max. 150
Level of Drive (μW)	50 (Max. 500)	50 (Max. 500)
Load Capacitance (pF)	8	6 to 32
Frequency Aging (+25 °C)	---	Max. $\pm 10 \times 10^{-6}$ / year *1
Specifications Number	STD-CJL-6	Refer to *2

Please specify the model name, frequency, and specification number when you order products.
For further questions regarding specifications, please feel free to contact us.
*1 If you have any other requests, NDK will study it.
*2 Ordering information: Overtone Order Fundamental / 3rd Overtone, the Operating Temperature Range, Frequency versus Temperature Characteristics, Frequency Tolerance, and Load Capacitance.
Ex. Model, Frequency (8.000000MHz 6digits), S1: Fundamental or S3 : 3rd overtone
– Operating Temperature Range (−40 to +150°C) − Frequency versus Temperature Characteristics ($\pm 150 \times 10^{-6}$)
− Frequency Tolerance ($\pm 50 \times 10^{-6}$) − Load Capacitance (10pF)
NX8045GE
8.000000MHz
S1-40150-150-50-10

■ Dimensions

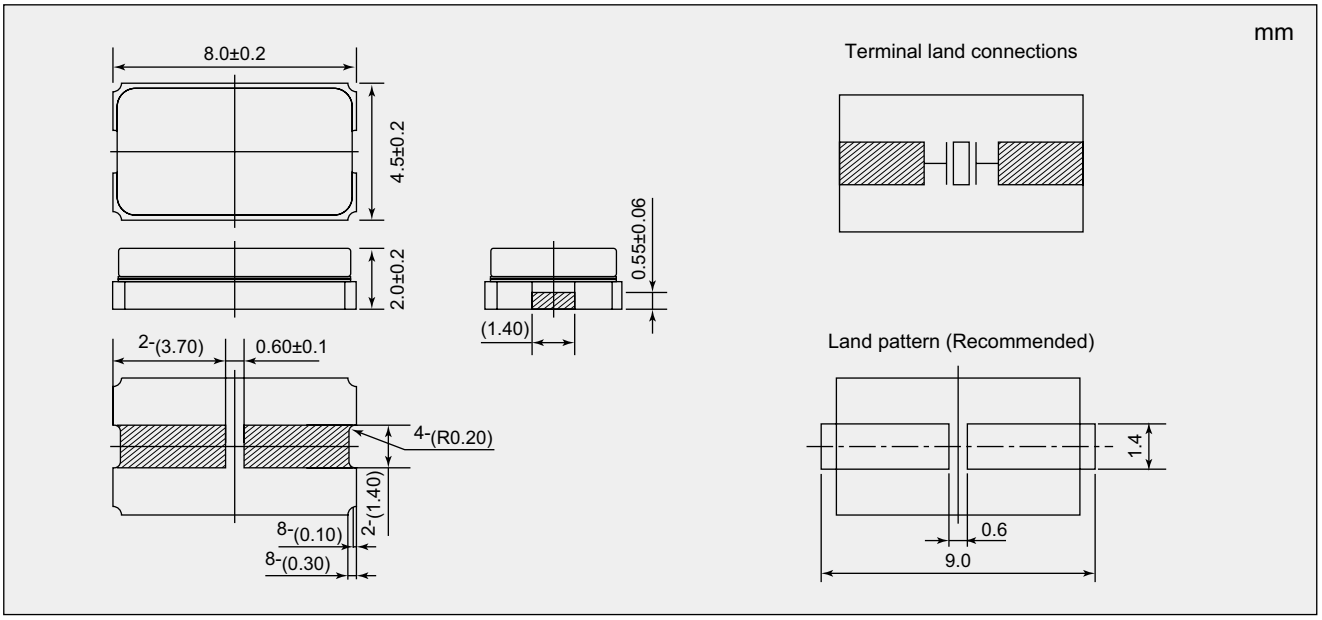

NX8045GB

For Automotive

■ Features

A small surface-mount type crystal unit, ideal for Automotive.
Compatible with an engine control CPU clock delivering the high reliability that is particularly demanded.

- Stable start-up characteristic even under extremely severe environmental conditions.
- Excellent environmental characteristics, including heat, vibration and shock resistance.
- Meets the requirements for re-flow profiling using lead-free solder.
- Conforms to AEC-Q200.

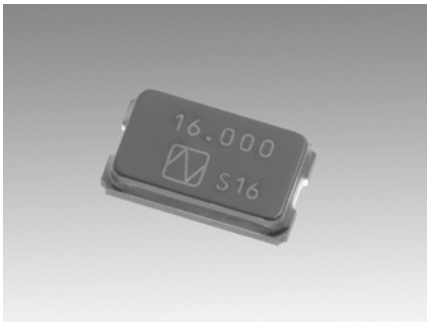

RoHS Compliant
Directive 2011/65/EU
Directive (EU) 2015/863

■ Specifications

Item / Model	NX8045GB	
Standard	Standard	Optional
Nominal Frequency (MHz)	8 ≤ F ≤ 40	8 ≤ F ≤ 40
Overtone Order	Fundamental	Fundamental
Frequency Tolerance (25 ±3 °C)	±50 × 10^{-6}	±50 × 10^{-6}
Frequency versus Temperature Characteristics (with reference to +25 °C)	±150 × 10^{-6}	±150 × 10^{-6}
Operating Temperature Range (°C)	−40 to +150	−40 to +150
Storage Temperature Range (°C)	−40 to +150	−40 to +150
Equivalent Series Resistance	Refer to *1	Refer to *1
Level of Drive (μW)	10 (Max. 500)	10 (Max. 500)
Load Capacitance (pF)	8	6 to 32
Frequency Aging (+25°C)	---	Max. ±10 × 10^{-6} / year *2
Specifications Number	STD-CSJ-1	Refer to *3

Please specify the model name, frequency, and specification number when you order products.
For further questions regarding specifications, please feel free to contact us.
*2 If you have any other requests, NDK will study it.
*3 Ordering information: Overtone Order, Fundamental / 3rd Overtone, the Operating Temperature Range, Frequency versus Temperature Characteristics, Frequency Tolerance, and Load Capacitance.
Ex. Model, Frequency (24.000000MHz 6digits), S1: Fundamental or S3 : 3rd overtone
– Operating Temperature Range (−40 to +150°C) − Frequency versus Temperature Characteristics (±150 × 10^{-6})
− Frequency Tolerance (±50 × 10^{-6}) − Load Capacitance (10pF)
NX8045GB
24.000000MHz
S1-40150-150-50-10

■ Dimensions

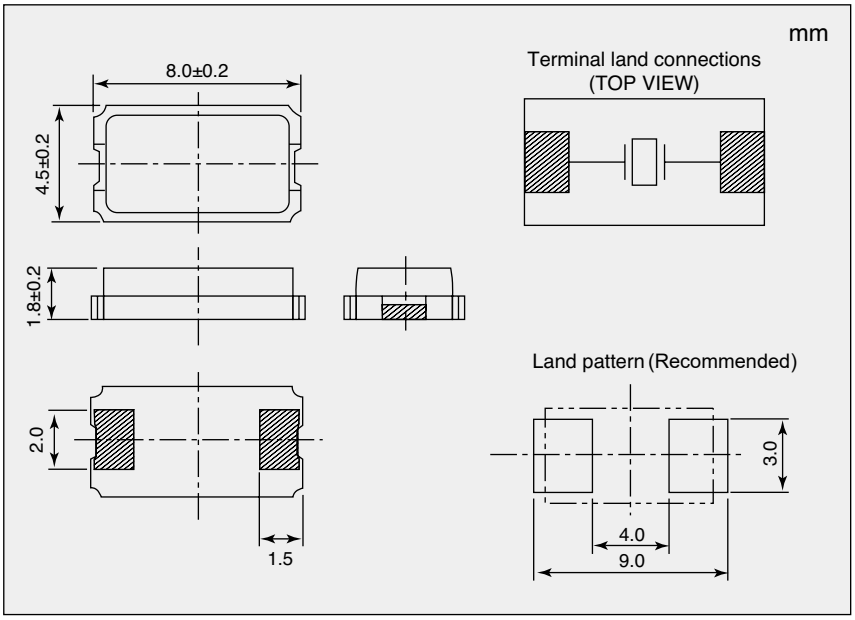

*1 Equivalent Series Resistance

Nominal Frequency (MHz)	Equivalent Series Resistance Max. (Ω)
8 ≤ F < 10	220
10 ≤ F ≤ 40	150

If you have any other requests, NDK will study it.

AT-41 / AT-41CD2

For OA / AV

■ Features

A highly stable and reliable low-height crystal unit with a metallic package, also suitable for surface mounting.

- Compatible with surface mounting.
- Airtight metal package ensures high-reliability.
- Taping package is for customer automatic loading operation.
- AT-41CD2 meets the requirements for re-flow profiling using lead-free solder.

Pb Free

RoHS Compliant
Directive 2011/65/EU
Directive (EU) 2015/863


AT-41


AT-41CD2

■ Specifications

Item \ Model	AT-41			AT-41CD2			AT-41 ／ AT-41CD2	
Standard	Standard						Optional	
Nominal Frequency (MHz)	3 ≤ F ≤ 37	26 ≤ F < 60	60 ≤ F ≤ 75	3 ≤ F ≤ 37	26 ≤ F < 60	60 ≤ F ≤ 75	4 ≤ F ≤ 37	26 ≤ F ≤ 40
Overtone Order	Fundamental	3rd overtone		Fundamental	3rd overtone		Fundamental	3rd overtone
Frequency Tolerance (25 ±3 °C)	$\pm 20 \times 10^{-6}$			$\pm 20 \times 10^{-6}$			$\pm 20 \times 10^{-6}$	
Frequency versus Temperature Characteristics (with reference to +25 °C)	$\pm 30 \times 10^{-6}$			$\pm 30 \times 10^{-6}$			$\pm 30 \times 10^{-6}$	
Operating Temperature Range (°C)	−10 to +70			−10 to +70			−40 to +85	
Storage Temperature Range (°C)	−40 to +85			−40 to +85			−40 to +85	
Equivalent Series Resistance	Refer to *1			Refer to *1			Refer to *1	
Level of Drive (μW)	Refer to *2 (Max. 1000)			Refer to *2 (Max. 1000)			Refer to *2	
Load Capacitance (pF)	16	Series resonance		16	Series resonance		6 to 32	
Frequency Aging (+25 °C)	---			---			Max. $\pm 5 \times 10^{-6}$ / year *3	
Specifications Number	STD-LPH-9	STD-LPH-10	STD-LPH-11	LN-L-0002	STD-LPH-3	STD-LPH-5	Refer to *4	

*1 Equivalent Series Resistance

Overtone Order	Nominal Frequency (MHz)	ESR Max. (Ω)
Fundamental	3 ≤ F < 3.2	400
	3.2 ≤ F < 3.5	200
	3.5 ≤ F < 4	150
	4 ≤ F < 4.5	120
	4.5 ≤ F < 5	100
	5 ≤ F < 6	80
	6 ≤ F < 8	70
	8 ≤ F < 10	60
	10 ≤ F < 12	50
	12 ≤ F ≤ 37	40
3rd overtone	26 ≤ F < 35	140
	35 ≤ F < 48	100
	48 ≤ F ≤ 75	80

*2 Level of Drive

Overtone Order	Nominal Frequency (MHz)	Level of Drive (μW)
Fundamental	3 ≤ F < 5	500
	5 ≤ F ≤ 37	50

Overtone Order	Nominal Frequency (MHz)	Level of Drive (μW)
3rd overtone	26 ≤ F < 60	500
	60 ≤ F ≤ 75	10

Please specify the model name, frequency, and specification number when you order products.
For further questions regarding specifications, please feel free to contact us.
*3 If you have any other requests, NDK will study it.
*4 Ordering information: Overtone Order Fundamental / 3rd Overtone, the Operating Temperature Range, Frequency versus Temperature Characteristics, Frequency Tolerance, and Load Capacitance.

Ex. Model, Frequency (24.000000MHz 6digits), S1: Fundamental or S3 : 3rd overtone – Operating Temperature Range (−40 to +85°C) − Frequency versus Temperature Characteristics ($\pm 30 \times 10^{-6}$)− Frequency Tolerance ($\pm 20 \times 10^{-6}$) − Load Capacitance (10pF)
AT-41
24.000000MHz
S1-4085-30-20-10

■ Dimensions

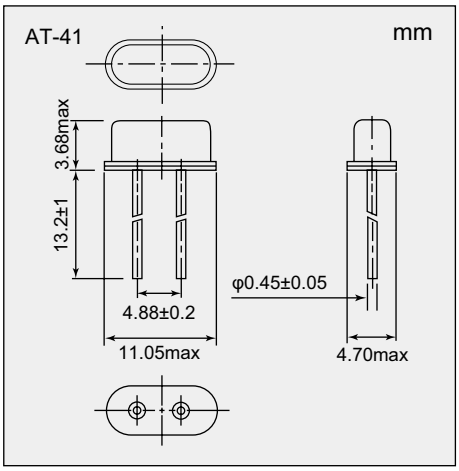

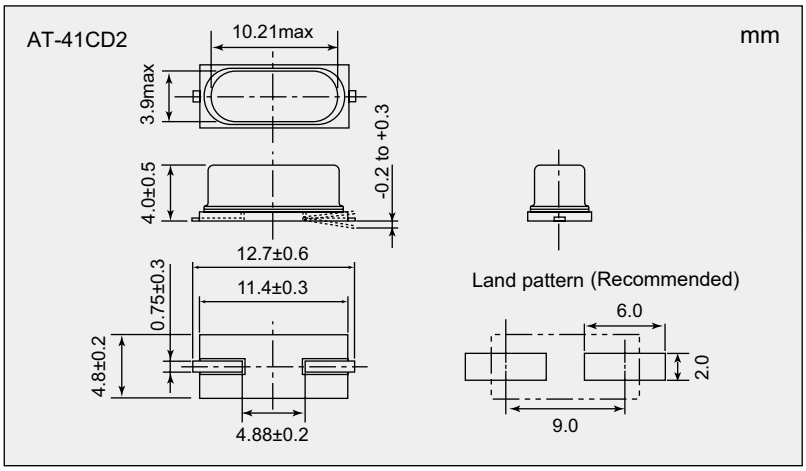

NR-2C / NR-2B

For High Precision Industry

■ Features

A highly reliable crystal unit with outstanding frequency stability and covering a broad frequency range.

- The product satisfies strict temperature characteristics standards, is shock resistant and has excellent frequency reproducibility.

Pb Free

RoHS Compliant
Directive 2011/65/EU
Directive (EU) 2015/863

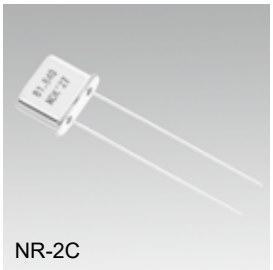
NR-2C

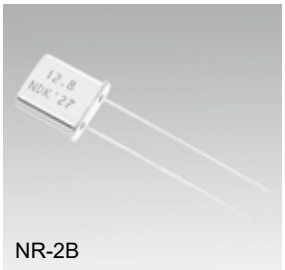
NR-2B

■ Specifications

Item \ Model	NR-2C			NR-2B				NR-2C / NR-2B
Standard	Standard			Standard				Optional
Nominal Frequency (MHz)	10 ≤ F ≤ 25	45 ≤ F ≤ 95	80 ≤ F ≤150	10 ≤ F ≤ 30	25 ≤ F < 30	30 ≤ F ≤ 75	50 ≤ F ≤100	NR-2C: 10 ≤ F ≤150 NR-2B: 10 ≤ F ≤100
Overtone Order	Fundamental	3rd overtone	5th overtone	Fundamental	3rd overtone	3rd overtone	5th overtone	Fundamental/ 3rd overtone/ 5th overtone
Frequency Tolerance (25 ±3 °C)	$\pm 10 \times 10^{-6}$			$\pm 10 \times 10^{-6}$				$\pm 10 \times 10^{-6}$
Frequency versus Temperature Characteristics (with reference to +25 °C)	$\pm 5 \times 10^{-6}$			$\pm 5 \times 10^{-6}$				$\pm 5 \times 10^{-6}$
Operating Temperature Range (°C)	−10 to +60			−10 to +60				−10 to +60
Storage Temperature Range (°C)	−40 to +85			−40 to +85				−40 to +85
Equivalent Series Resistance (Ω)	Max. 40	Max. 60	Max. 80	Max. 25	Max. 50	Max. 45	Max. 60	---
Level of Drive (μW)	10 (Max. 100)			10 (Max. 100)				10 (Max. 100)
Load Capacitance (pF)	12	Series resonance		12	Series resonance			Series or 8 to 20
Frequency Aging (+25°C)	---			---				Max. $\pm 5 \times 10^{-6}$ / year *1
Specifications Number	STD-CMB-4	STD-CMB-5	STD-CMB-6	STD-CMB-1	STD-CMB-2		STD-CMB-3	Refer to *2

Please specify the model name, frequency, and specification number when you order products.
For further questions regarding specifications, please feel free to contact us.
*1 If you have any other requests, NDK will study it.
*2 Ordering information: Overtone Order Fundamental / 3rd Overtone, the Operating Temperature Range, Frequency versus Temperature Characteristics, Frequency Tolerance, and Load Capacitance.
Ex. Model, Frequency (100.000000MHz 6digits), S1: Fundamental or S3 : 3rd overtone or S5 : 5th overtone – Operating Temperature Range (−10 to +60°C) − Frequency versus Temperature Characteristics ($\pm 5 \times 10^{-6}$) − Frequency Tolerance ($\pm 10 \times 10^{-6}$) − Load Capacitance (8pF)
NR-2C
100.000000MHz
S5-1060-5-10-8

■ Dimensions

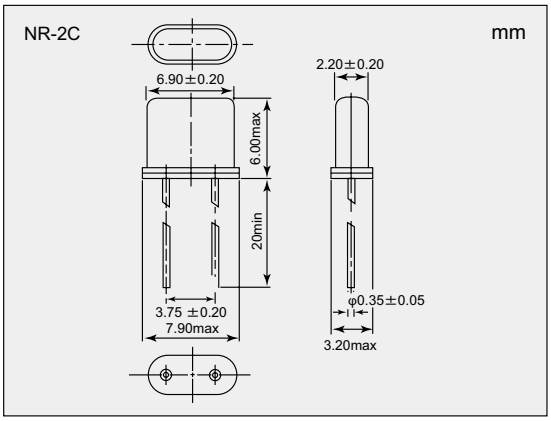

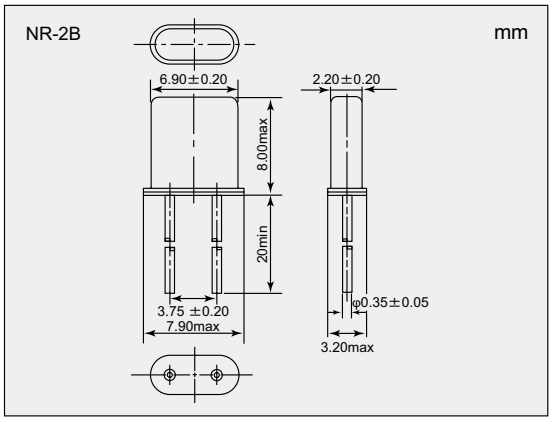

RC-8 / NC-18C

For High Precision Industry

■ Features

A highly reliable crystal unit with outstanding frequency stability and covering a broad frequency range.

- The product satisfies strict temperature characteristics standards, is shock resistant and has excellent frequency reproducibility.


RC-8

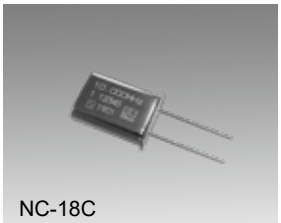
NC-18C

RoHS Compliant
Directive 2011/65/EU
Directive (EU) 2015/863

■ Specifications

Item / Model	RC-8	NC-18C	RC-8 / NC-18C
Standard	Standard	Standard	Optional
Nominal Frequency (MHz)	5 ≤ F ≤ 20	10 ≤ F ≤ 20	RC-8 : 5 ≤ F ≤ 20 NC-18C : 10 ≤ F ≤ 20
Overtone Order	3rd overtone	3rd overtone	3rd overtone
Operating Temperature Range (°C)	–40 to +120	–40 to +120	–40 to +120
Storage Temperature Range (°C)	–55 to +125	–55 to +125	–55 to +125
Turnover point (°C)	+70 to +110	+70 to +110	+70 to +110
Frequency Tolerance (at middle of turnover point)	Max. ±3 × 10^{-6}	Max. ±3 × 10^{-6}	Max. ±3 × 10^{-6}
Equivalent Series Resistance (Ω)	Max. 150	Max. 150	Max. 150
Level of Drive (μW)	Max. 100	Max. 100	Max. 100
Load Capacitance (pF)	Series to 32	Series to 32	Series to 32
Frequency Aging (at Turnover point)	---	---	Max. ±100 × 10^{-9} / year *1 (24H after ref)
Specifications Number	STD-CWB-2	STD-CWB-1	Refer to *2

Please specify the model name, frequency, and specification number when you order products.
For further questions regarding specifications, please feel free to contact us.
*1 If you have any other requests, NDK will study it.
*2 Ordering information: Overtone Order 3rd Overtone, the Operating Temperature Range, Frequency Tolerance, and Load Capacitance.
Ex. Model, Frequency(12.000000MHz 6digits), S3 : 3rd overtone – Operating Temperature Range(−40 to +120°C) − Frequency Tolerance(±3 × 10^{-6}) − Load Capacitance(10pF)
RC-8
12.000000MHz
S3-40120-3-10

■ Dimensions